22x34 SHEET
1:1

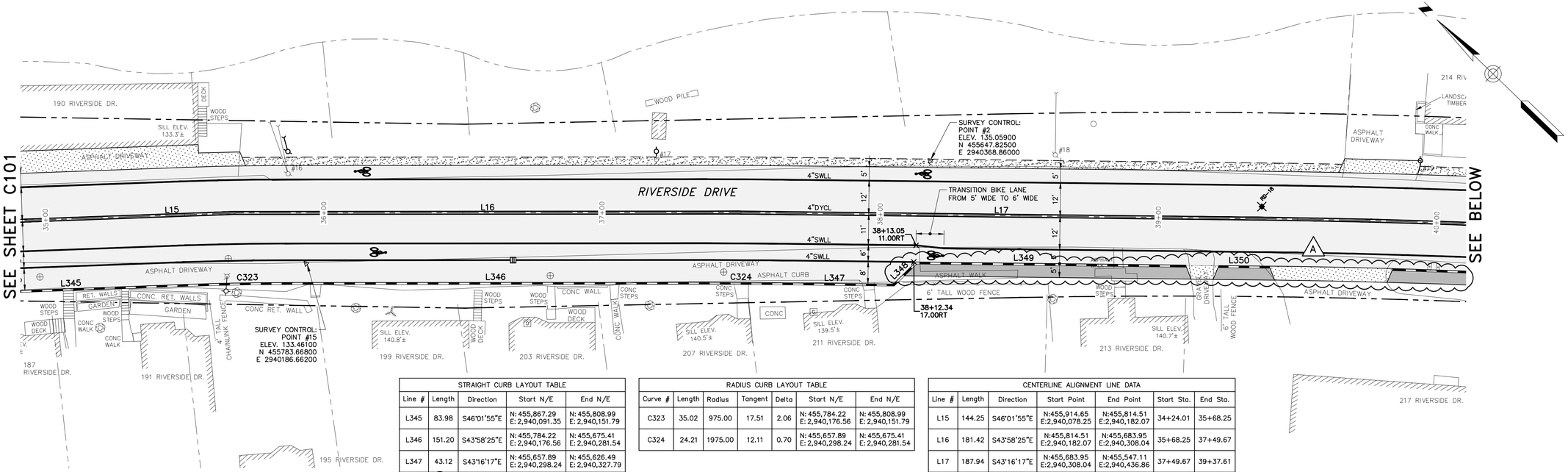

STRAIGHT CURB LAYOUT TABLE				
Line #	Length	Direction	Start N/E	End N/E
L345	83.98	S46°01'55"E	N: 455,867.29 E: 2,940,091.35	N: 455,808.99 E: 2,940,151.79
L346	151.20	S43°58'25"E	N: 455,784.22 E: 2,940,176.56	N: 455,675.41 E: 2,940,281.54
L347	43.12	S43°16'17"E	N: 455,657.89 E: 2,940,298.24	N: 455,626.49 E: 2,940,327.79
L348	11.31	S88°16'17"E	N: 455,626.49 E: 2,940,327.79	N: 455,626.15 E: 2,940,339.10
L349	96.99	S43°16'17"E	N: 455,626.15 E: 2,940,339.10	N: 455,555.53 E: 2,940,405.58
L350	18.09	S43°16'17"E	N: 455,546.85 E: 2,940,413.76	N: 455,533.68 E: 2,940,426.16

A

RADIUS CURB LAYOUT TABLE						
Curve #	Length	Radius	Tangent	Delta	Start N/E	End N/E
C323	35.02	975.00	17.51	2.06	N: 455,784.22 E: 2,940,176.56	N: 455,808.99 E: 2,940,151.79
C324	24.21	1975.00	12.11	0.70	N: 455,657.89 E: 2,940,298.24	N: 455,675.41 E: 2,940,281.54

CENTERLINE ALIGNMENT LINE DATA						
Line #	Length	Direction	Start Point	End Point	Start Sta.	End Sta.
L15	144.25	S46°01'55"E	N:455,914.65 E:2,940,078.25	N:455,814.51 E:2,940,182.07	34+24.01	35+68.25
L16	181.42	S43°58'25"E	N:455,814.51 E:2,940,182.07	N:455,683.95 E:2,940,308.04	35+68.25	37+49.67
L17	187.94	S43°16'17"E	N:455,683.95 E:2,940,308.04	N:455,547.11 E:2,940,436.86	37+49.67	39+37.61

NOTES:

1. SEE CROSS SECTIONS FOR ADDITIONAL LAYOUT (STATION AND OFFSET) INFORMATION.
2. LAYOUT DATA REPRESENTS FRONT FACE OF CURB (WHERE CURB IS PROPOSED).

PLAN

SCALE: 1" = 20'

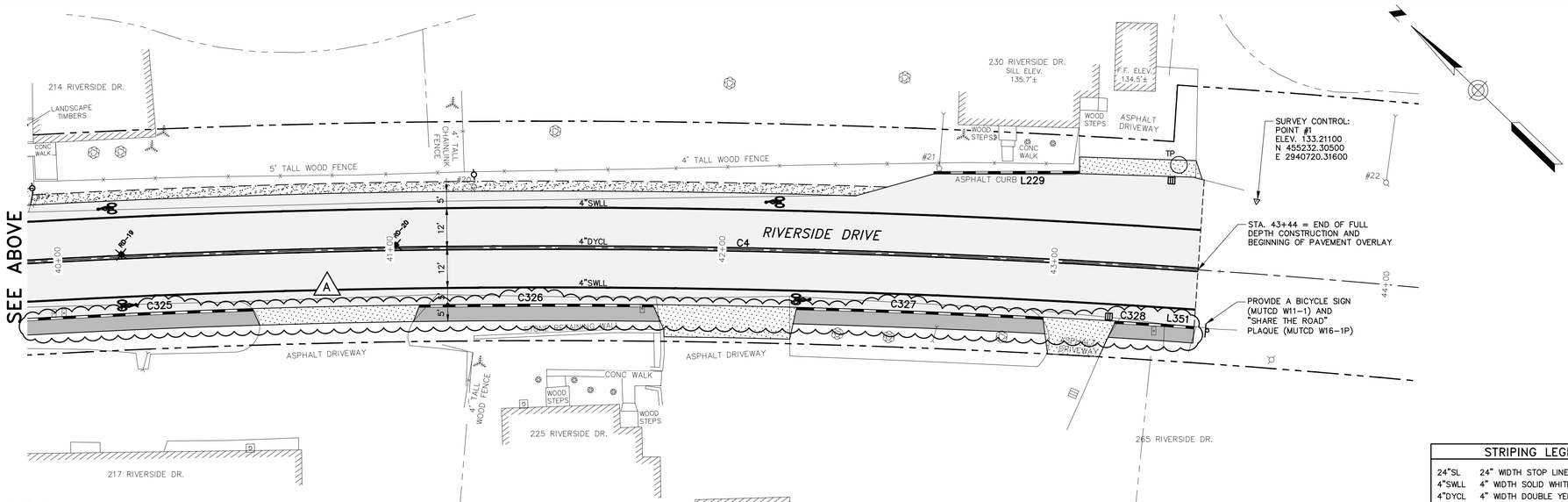

RADIUS CURB LAYOUT TABLE						
Curve #	Length	Radius	Tangent	Delta	Start N/E	End N/E
C325	72.84	2842.79	36.42	1.47	N: 455,446.55 E: 2,940,504.74	N: 455,501.03 E: 2,940,456.39
C326	70.15	2842.79	35.08	1.41	N: 455,353.75 E: 2,940,581.62	N: 455,408.17 E: 2,940,537.35
C327	74.12	2842.79	37.06	1.49	N: 455,260.26 E: 2,940,652.69	N: 455,319.60 E: 2,940,608.29
C328	14.00	2842.79	7.00	0.28	N: 455,231.08 E: 2,940,673.66	N: 455,242.48 E: 2,940,665.53

A

CENTERLINE ALIGNMENT CURVE DATA						
Curve	Length	Radius	Tangent	Delta	PC Sta.	PT Sta.
C4	537.50	2859.79	269.54	10°46'07"	39+37.61	44+75.11

STRAIGHT CURB LAYOUT TABLE				
Line #	Length	Direction	Start N/E	End N/E
L229	43.89	N39°12'16"W	N: 455,278.82 E: 2,940,693.17	N: 455,312.83 E: 2,940,665.43
L351	9.73	S34°33'30"E	N: 455,231.08 E: 2,940,673.66	N: 455,223.07 E: 2,940,679.18

A

PLAN

SCALE: 1" = 20'

STRIPING LEGEND	
24"SL	24" WIDTH STOP LINE
4"SWLL	4" WIDTH SOLID WHITE LANE LINE
4"DYCL	4" WIDTH DOUBLE YELLOW CENTERLINE
4"DWLL	4" WIDTH DASHED WHITE LANE LINE

20' 0 20' 40'
BAR SCALE
1" = 20'
CHECK GRAPHIC SCALE BEFORE USING

41 Hutchins Drive
Portland, Maine 04102
800.426.4262 | www.woodardcurran.com
WOODARD & CURRAN

COMMITMENT & INTEGRITY DRIVE RESULTS

THIS DOCUMENT, THE PROPERTY OF WOODARD & CURRAN INC. AND ITS CLIENT, IS INTENDED FOR THE USE OF THE CLIENT FOR A SPECIFIC PURPOSE.

STATE OF MAINE
DAVID A. SENUS
10791
LICENSED PROFESSIONAL ENGINEER
4/16/2015

REV	ADDENDUM 1	DATE
A		4/16/2015

DESIGNED BY: MDLM
DRAWN BY: JBC
CHECKED BY: DAS
203970.19-C200A.DWG

RIVERSIDE DRIVE LAYOUT PLAN
STA. 35+00 TO STA. 43+50

CITY OF AUBURN
60 COURT STREET
AUBURN, ME 04210

RIVERSIDE DRIVE RECONSTRUCTION

JOB NO.: 203970.19
DATE: APRIL 2, 2015
SCALE: AS NOTED
SHEET: 5 OF 27

C102

O:\203970 City of Auburn-General Consulting Services\wip\19 Riverside Dr Recon\Drawings\Addendum 1\203970.19-C200A.dwg, Apr 15, 2015 - 11:37am

22x34 SHEET
1:1

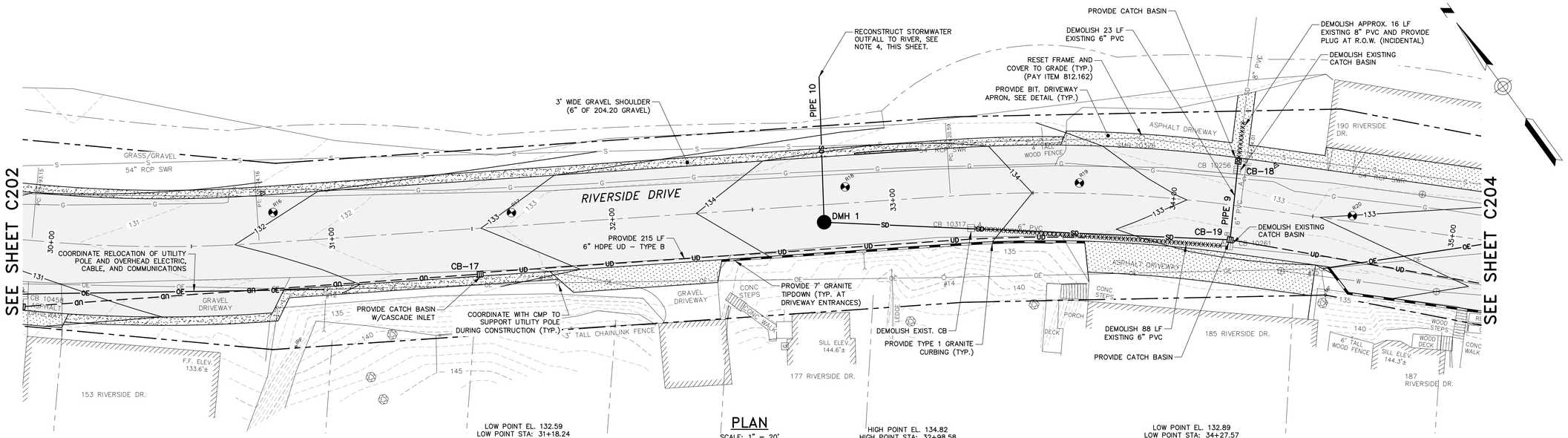

PLAN

SCALE: 1" = 20'

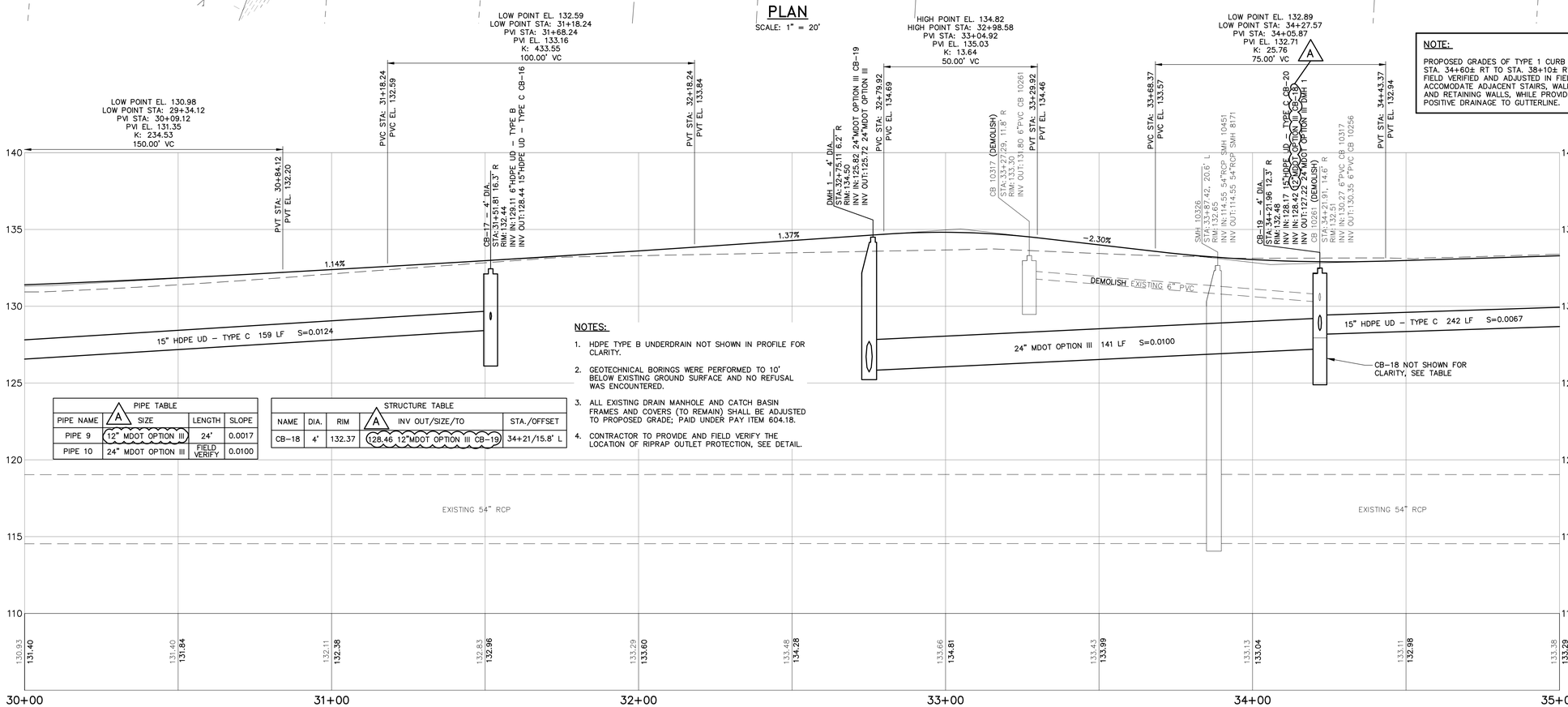

NOTE:

PROPOSED GRADES OF TYPE 1 CURB FROM STA. 34+60± RT TO STA. 38+10± RT TO BE FIELD VERIFIED AND ADJUSTED IN FIELD TO ACCOMODATE ADJACENT STAIRS, WALKWAYS, AND RETAINING WALLS, WHILE PROVIDING POSITIVE DRAINAGE TO GUTTERLINE.

NOTES:

1. HDPE TYPE B UNDERDRAIN NOT SHOWN IN PROFILE FOR CLARITY.
2. GEOTECHNICAL BORINGS WERE PERFORMED TO 10' BELOW EXISTING GROUND SURFACE AND NO REFUSAL WAS ENCOUNTERED.
3. ALL EXISTING DRAIN MANHOLE AND CATCH BASIN FRAMES AND COVERS (TO REMAIN) SHALL BE ADJUSTED TO PROPOSED GRADE; PAID UNDER PAY ITEM 604.18.
4. CONTRACTOR TO PROVIDE AND FIELD VERIFY THE LOCATION OF RIPRAP OUTLET PROTECTION, SEE DETAIL.

PIPE TABLE

PIPE NAME	A SIZE	LENGTH	SLOPE
PIPE 9	12" MDOT OPTION III	24'	0.0017
PIPE 10	24" MDOT OPTION III	FIELD VERIFY	0.0100

STRUCTURE TABLE

NAME	DIA.	RIM	A INV OUT/SIZE/TO	STA./OFFSET
CB-18	4'	132.37	128.46 12"MDOT OPTION III CB-19	34+21/15.8' L

PROFILE STA. 30+00 TO STA. 35+00

HORIZONTAL SCALE: 1" = 10'
VERTICAL SCALE: 1" = 2'

BAR SCALE
1" = 20'
CHECK GRAPHIC SCALE BEFORE USING

41 Hutchins Drive
Portland, Maine 04102
800.426.4262 | www.woodardcurran.com
WOODARD & CURRAN

COMMITMENT & INTEGRITY DRIVE RESULTS

THIS DOCUMENT IS THE PROPERTY OF WOODARD & CURRAN INC. AND THE CLIENT. THIS DOCUMENT MAY NOT BE REPRODUCED OR TRANSMITTED WITHOUT WRITTEN PERMISSION.

STATE OF MAINE
DAVID A. SENUS
10791
LICENSED
PROFESSIONAL ENGINEER
4/16/2015

REV	DESCRIPTION	DATE
A	ADDENDUM 1	4/16/2015

DESIGNED BY: MDLM
DRAWN BY: JBC
CHECKED BY: DAS
203970.19-C200A.DWG

RIVERSIDE DRIVE PLAN & PROFILE STA. 30+00 TO STA. 35+00

CITY OF AUBURN
60 COURT STREET
AUBURN, ME 04210

RIVERSIDE DRIVE RECONSTRUCTION

JOB NO.: 203970.19
DATE: APRIL 2, 2015
SCALE: AS NOTED
SHEET: 9 OF 27

C203

O:\203970 City of Auburn-General Consulting Services\wip\19 Riverside Dr Recon\Drawings\Addendum 1\203970.19-C200A.dwg, Apr 15, 2015 - 11:04am

22x34 SHEET
1:1

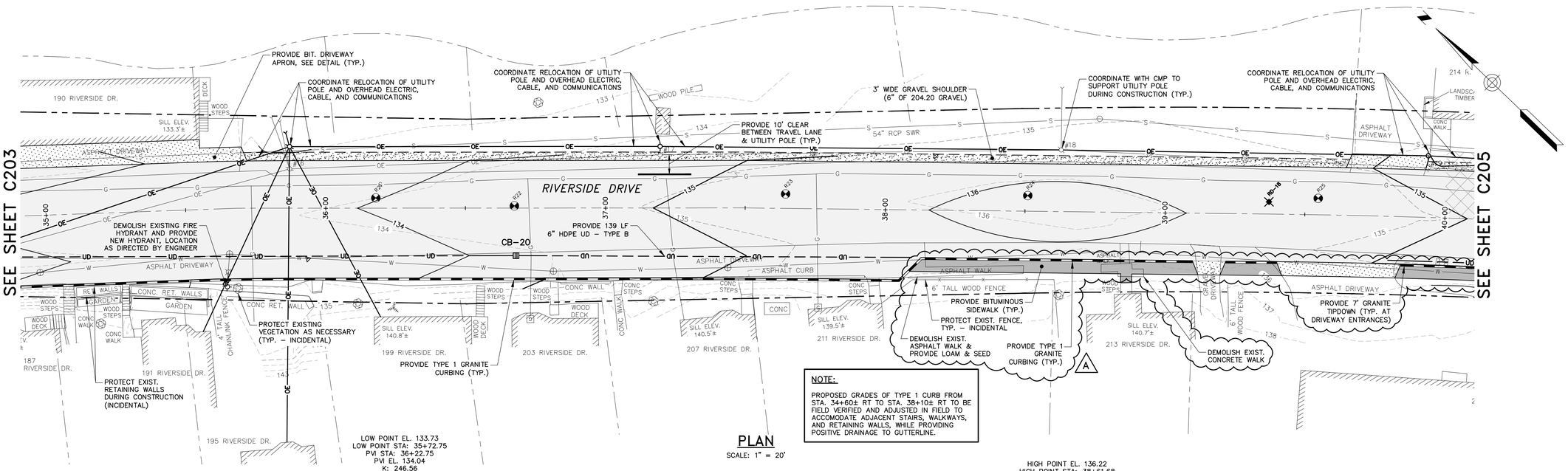

NOTE:

PROPOSED GRADES OF TYPE 1 CURB FROM STA. 34+60± RT TO STA. 38+10± RT TO BE FIELD VERIFIED AND ADJUSTED IN FIELD TO ACCOMODATE ADJACENT STAIRS, WALKWAYS, AND RETAINING WALLS, WHILE PROVIDING POSITIVE DRAINAGE TO GUTTERLINE.

PLAN

SCALE: 1" = 20'

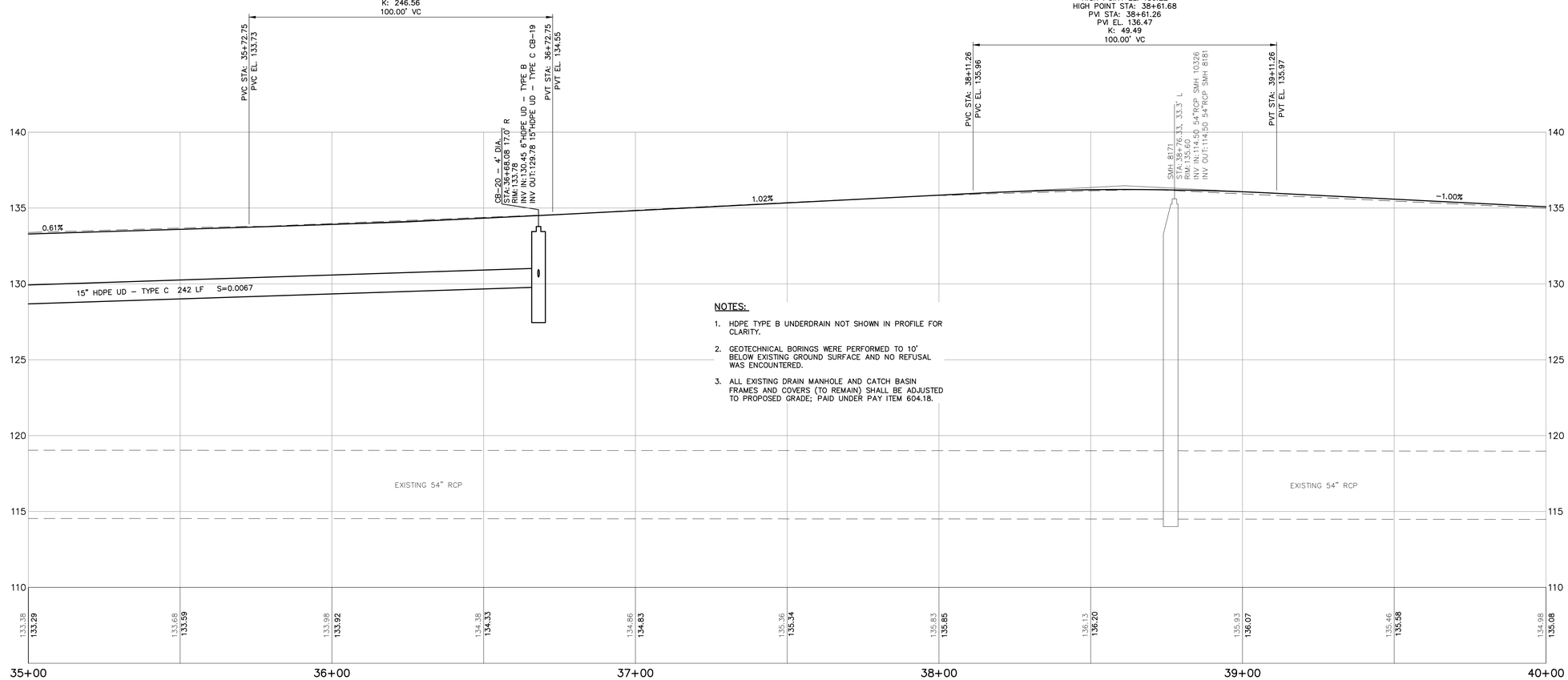

NOTES:

1. HDPE TYPE B UNDERDRAIN NOT SHOWN IN PROFILE FOR CLARITY.
2. GEOTECHNICAL BORINGS WERE PERFORMED TO 10' BELOW EXISTING GROUND SURFACE AND NO REFUSAL WAS ENCOUNTERED.
3. ALL EXISTING DRAIN MANHOLE AND CATCH BASIN FRAMES AND COVERS (TO REMAIN) SHALL BE ADJUSTED TO PROPOSED GRADE; PAID UNDER PAY ITEM 604.18.

PROFILE STA. 35+00 TO STA. 40+00

HORIZONTAL SCALE: 1" = 10'
VERTICAL SCALE: 1" = 2'

NOTE:

HDPE TYPE B UNDERDRAIN NOT SHOWN IN PROFILE FOR CLARITY.

BAR SCALE
1" = 20'
CHECK GRAPHIC SCALE BEFORE USING

41 Hutchins Drive
Portland, Maine 04102
800.426.4262 | www.woodardcurran.com
WOODARD & CURRAN
COMMITMENT & INTEGRITY DRIVE RESULTS

THIS DOCUMENT IS THE PROPERTY OF WOODARD & CURRAN INC. AND ITS CLIENT. REPRODUCTION OF THIS DOCUMENT IS PROHIBITED WITHOUT WRITTEN PERMISSION.

STATE OF MAINE
DAVID A. SENUS
10791
PROFESSIONAL ENGINEER
4/16/2015

REV	DESCRIPTION	DATE
A	ADDENDUM 1	4/16/2015

DESIGNED BY: MDLM
DRAWN BY: JBC
CHECKED BY: DAS
203970.19–C200A.DWG

RIVERSIDE DRIVE PLAN & PROFILE STA. 35+00 TO STA. 40+00

CITY OF AUBURN
60 COURT STREET
AUBURN, ME 04210

RIVERSIDE DRIVE RECONSTRUCTION

JOB NO.: 203970.19
DATE: APRIL 2, 2015
SCALE: AS NOTED
SHEET: 10 OF 27

C204

22x34 SHEET
1:1

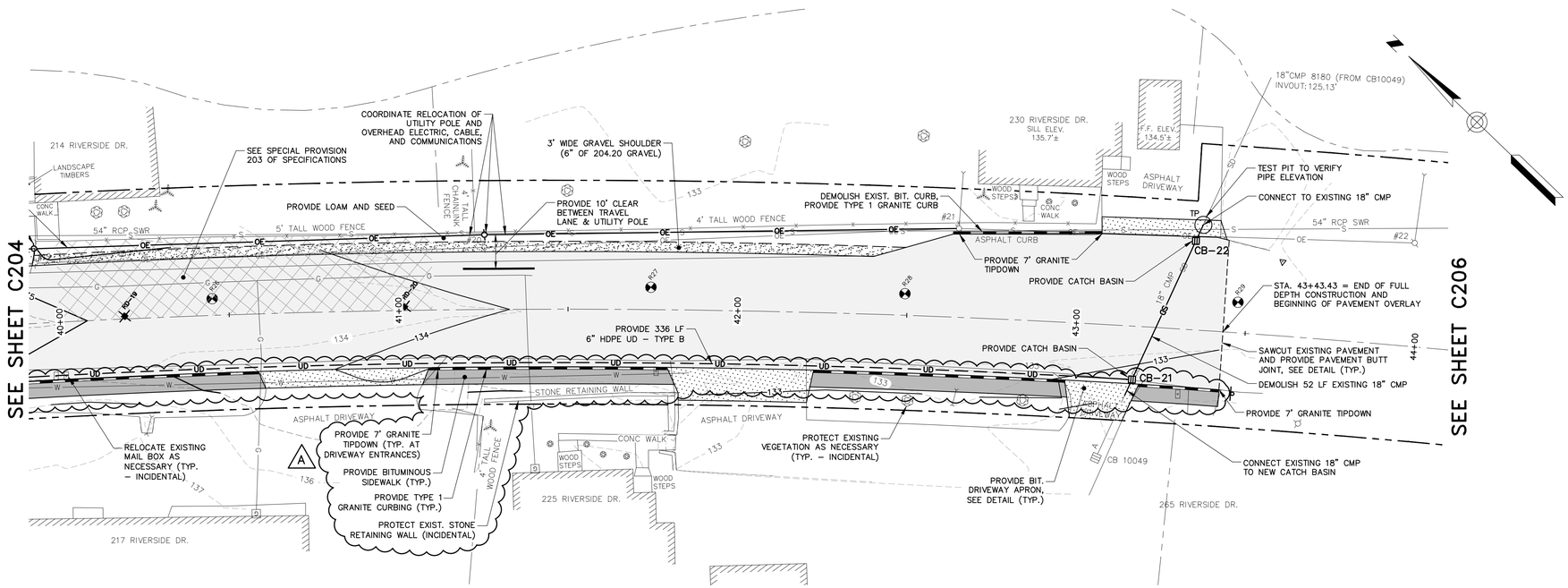

PLAN

SCALE: 1" = 20'

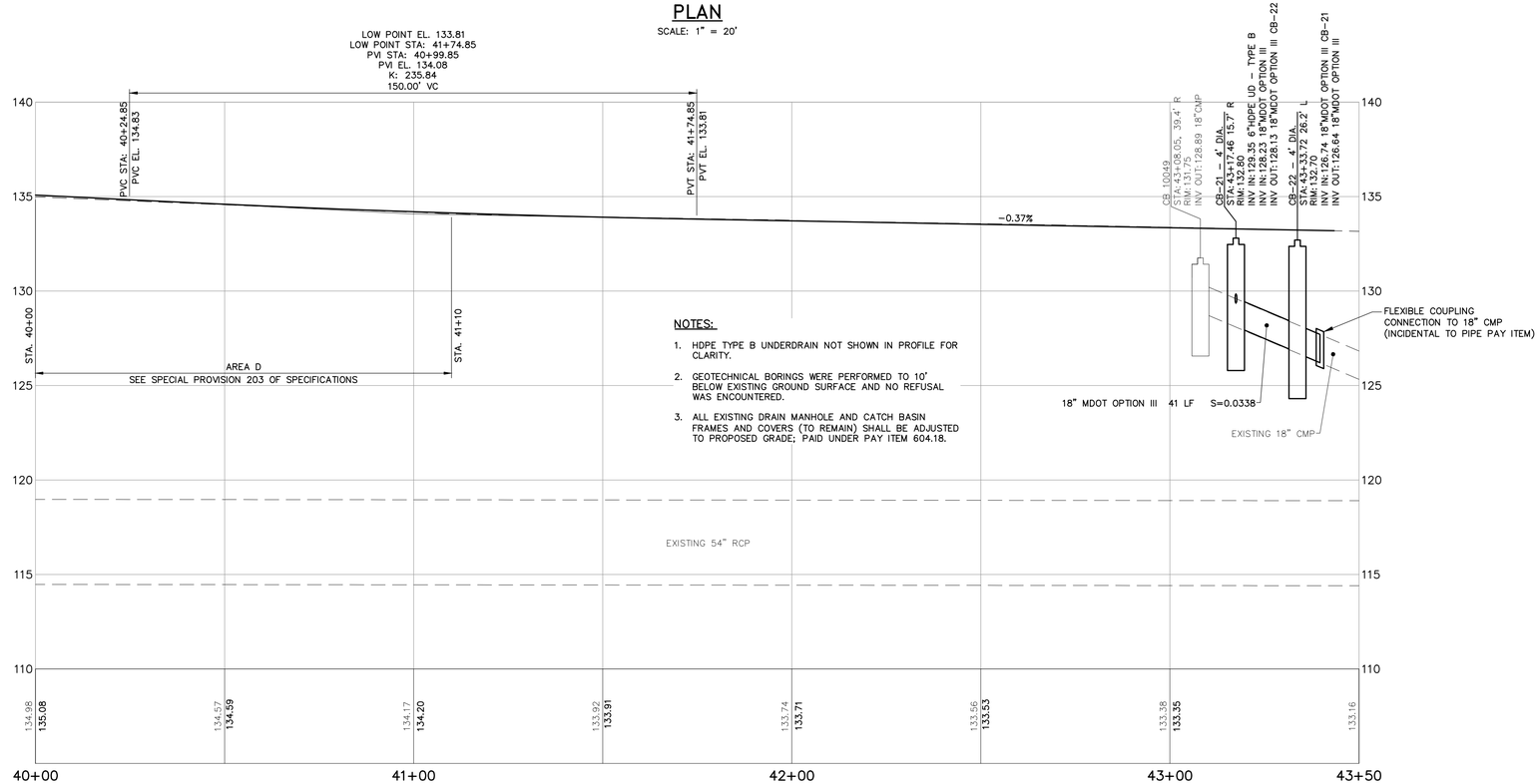

NOTES:

1. HDPE TYPE B UNDERDRAIN NOT SHOWN IN PROFILE FOR CLARITY.
2. GEOTECHNICAL BORINGS WERE PERFORMED TO 10' BELOW EXISTING GROUND SURFACE AND NO REFUSAL WAS ENCOUNTERED.
3. ALL EXISTING DRAIN MANHOLE AND CATCH BASIN FRAMES AND COVERS (TO REMAIN) SHALL BE ADJUSTED TO PROPOSED GRADE; PAID UNDER PAY ITEM 604.18.

PROFILE STA. 40+00 TO STA. 43+50

HORIZONTAL SCALE: 1" = 10'
VERTICAL SCALE: 1" = 2'

NOTE:

HDPE TYPE B UNDERDRAIN NOT SHOWN IN PROFILE FOR CLARITY.

20' 0 20' 40'
BAR SCALE
1" = 20'
CHECK GRAPHIC SCALE BEFORE USING

41 Hutchins Drive
Portland, Maine 04102
800.426.4262 | www.woodardcurran.com
WOODARD & CURRAN
COMMITMENT & INTEGRITY DRIVE RESULTS

THIS DOCUMENT IS THE PROPERTY OF WOODARD & CURRAN INC. AND ITS CLIENT. REPRODUCTION OR USE WITHOUT WRITTEN PERMISSION IS PROHIBITED.

STATE OF MAINE
DAVID A. SENUS
10791
LICENSED
PROFESSIONAL ENGINEER
4/16/2015

REV	DESCRIPTION	DATE
A	ADDENDUM 1	4/16/2015

DESIGNED BY: MDLM
DRAWN BY: JBC
CHECKED BY: DAS
203970.19-C200A.DWG

RIVERSIDE DRIVE PLAN & PROFILE STA. 40+00 TO STA. 43+50

CITY OF AUBURN
60 COURT STREET
AUBURN, ME 04210

RIVERSIDE DRIVE RECONSTRUCTION

JOB NO.: 203970.19
DATE: APRIL 2, 2015
SCALE: AS NOTED
SHEET: 11 OF 27

C205

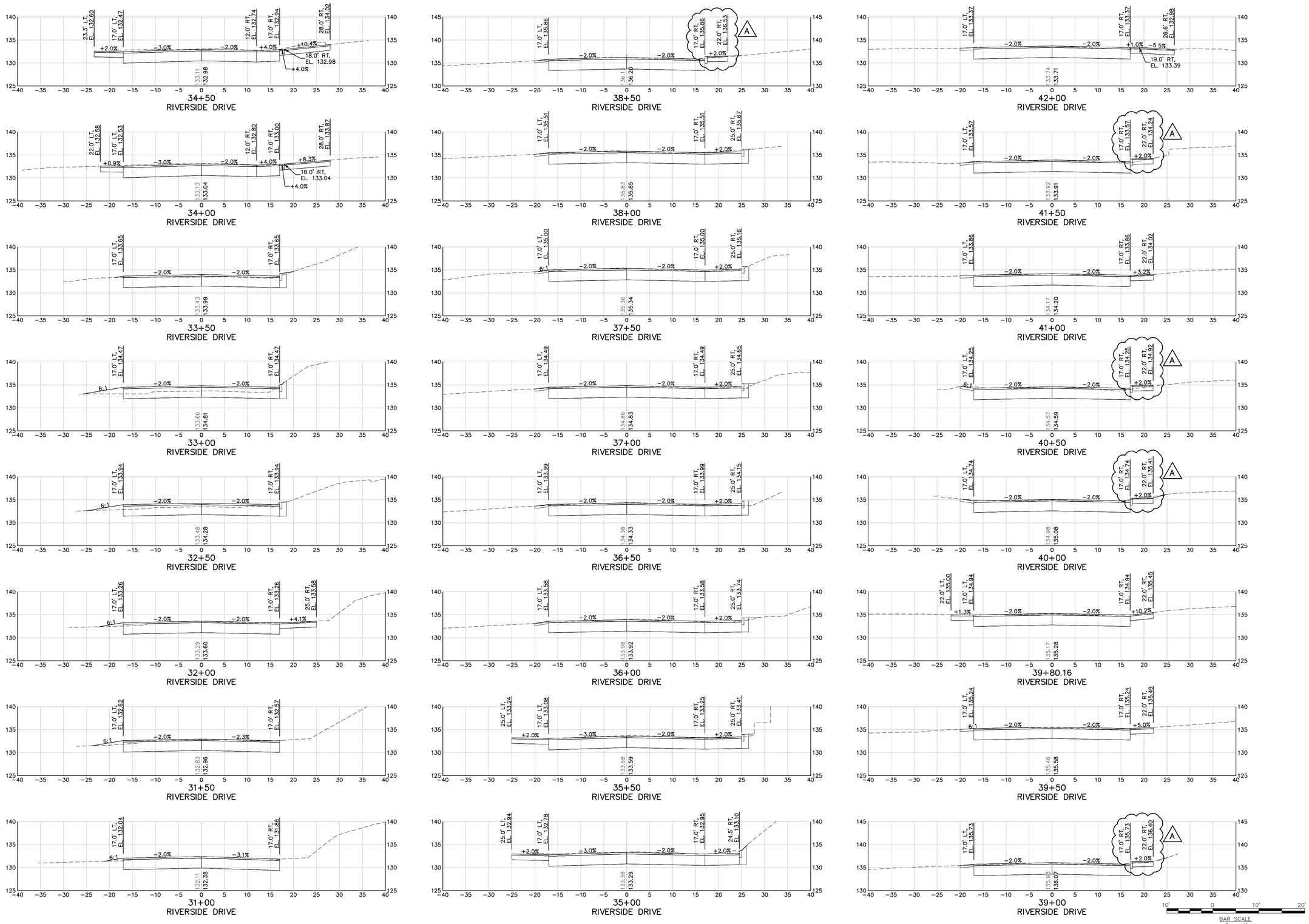

22x34 SHEET
1:1

41 Hutchins Drive
Portland, Maine 04102
800.426.4262 | www.woodardcurran.com

WOODARD & CURRAN

COMMITMENT & INTEGRITY DRIVE RESULTS

THIS DOCUMENT IS THE PROPERTY OF WOODARD & CURRAN INC. AND ITS CLIENT. REPRODUCTION OR MODIFICATION WITHOUT WRITTEN PERMISSION IS PROHIBITED.

STATE OF MAINE
DAVID A. SENUS
10791
LICENSED
PROFESSIONAL ENGINEER

4/16/2015

REV	DESCRIPTION	DATE
A	ADDENDUM 1	4/16/2015

DESIGNED BY: MDLM
DRAWN BY: JBC
CHECKED BY: DAS
203970.19-C200A.DWG

CROSS SECTIONS – 3

CITY OF AUBURN
60 COURT STREET
AUBURN, ME 04210

RIVERSIDE DRIVE RECONSTRUCTION

JOB NO.: 203970.19
DATE: APRIL 2, 2015
SCALE: 1" = 10'
SHEET: 21 OF 27

C302

O:\203970 City of Auburn-General Consulting Services\wip\19 Riverside Dr Recon\Drawings\Addendum 1\203970.19-C200A.dwg, Apr 15, 2015 - 11:04am

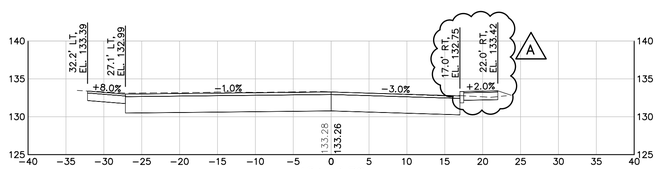

43+23.70
RIVERSIDE DRIVE

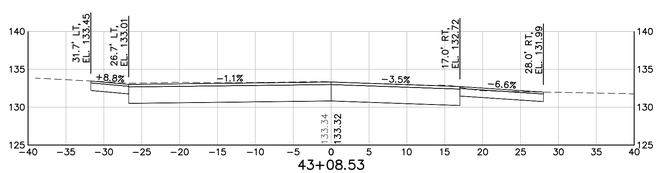

43+08.53
RIVERSIDE DRIVE

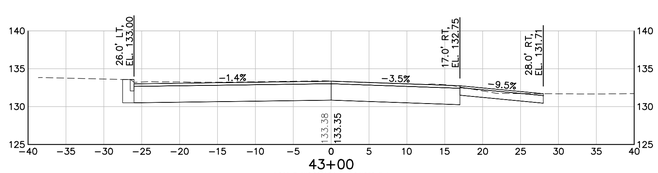

43+00
RIVERSIDE DRIVE

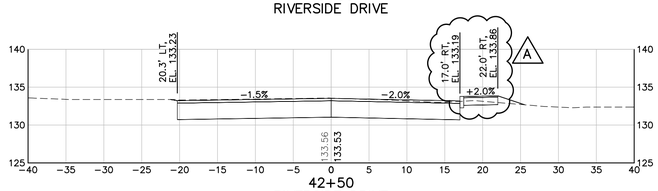

42+50
RIVERSIDE DRIVE

10' 0 10' 20'
BAR SCALE
1" = 10'
CHECK GRAPHIC SCALE BEFORE USING

22x34 SHEET
1:1

41 Hutchins Drive
Portland, Maine 04102
800.426.4262 | www.woodardcurran.com
WOODARD & CURRAN
COMMITMENT & INTEGRITY DRIVE RESULTS

THIS DOCUMENT IS THE PROPERTY OF WOODARD & CURRAN INC. AND ITS CLIENT. REPRODUCTION OR MODIFICATION WITHOUT WRITTEN PERMISSION IS PROHIBITED.

STATE OF MAINE
DAVID A. SENUS
10791
LICENSED PROFESSIONAL ENGINEER

4/16/2015

REV	DESCRIPTION	DATE
A	ADDENDUM 1	4/16/2015

DESIGNED BY: MDLM
DRAWN BY: JBC
CHECKED BY: DAS
203970.19-C200A.DWG

CROSS SECTIONS – 4

CITY OF AUBURN
60 COURT STREET
AUBURN, ME 04210

RIVERSIDE DRIVE RECONSTRUCTION

JOB NO.: 203970.19
DATE: APRIL 2, 2015
SCALE: 1" = 10'
SHEET: 22 OF 27

C303

O:\203970 City of Auburn-General Consulting Services\wip\19 Riverside Dr Recon\Drawings\Addendum 1\203970.19-C200A.dwg, Apr 15, 2015 - 11:04am

22x34 SHEET
1:1

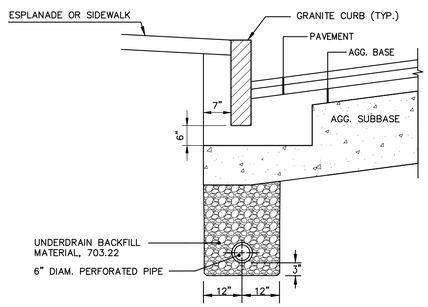

NOTES:
1. UNDERDRAIN PIPE INVERT ELEVATIONS SHALL BE AT LEAST 42 INCHES BELOW GUTTER GRADES.
2. PERFORATIONS IN UNDERDRAIN PIPE SHALL BE ORIENTED DOWN.

TYPE "B" UNDERDRAIN INSTALLATION DETAIL

N.T.S.

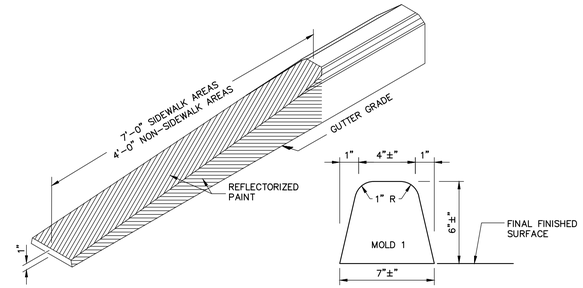

BITUMINOUS CURB – TYPE 3

N.T.S.

CURB TYPE 1 ON CURVES			
TYPE	RADIUS OF CURVE	LENGTH	STONE IS CUT OR CAST
1	0' TO 60' INCL.	4' MIN.	ARC TO FIT CURVE
	OVER 60' TO 160'	4' TO 6'	STRAIGHT PIECES

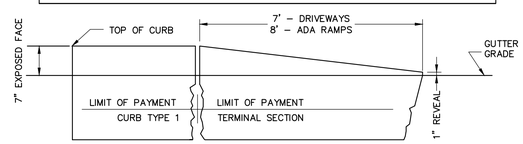

TERMINAL SECTION TYPE "1"

TERMINAL CURB SECTION

N.T.S.

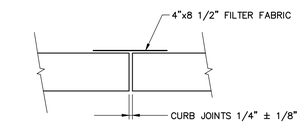

PLAN

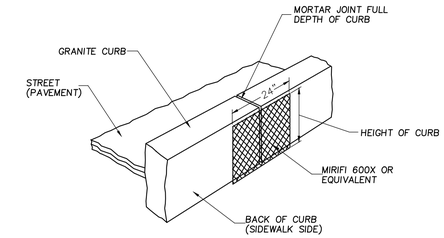

CURB JOINT DETAIL

N.T.S.

A

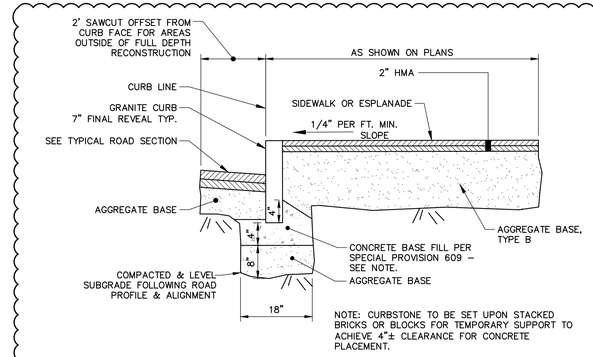

NOTE: CURBSTONE TO BE SET UPON STACKED BRICKS OR BLOCKS FOR TEMPORARY SUPPORT TO ACHIEVE 4"± CLEARANCE FOR CONCRETE PLACEMENT.

BITUMINOUS SIDEWALK AND GRANITE CURB INSTALLATION

N.T.S.

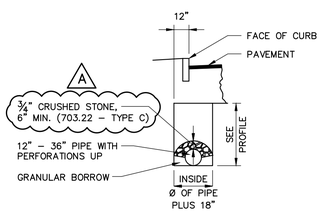

NOTES:

1. THE MAXIMUM VERTICAL MEASUREMENT OF DEPTH FOR PAYMENT OF STRUCTURAL ROCK EXCAVATION WILL BE TO A HORIZONTAL PLANE LOCATED 12" BELOW THE BOTTOM OF THE INVERT OF THE PIPE FOR UNDERDRAIN TYPE "B" AND UNDERDRAIN TYPE "C".
2. THE MATERIAL FOR ELBOWS, TEES, AND WYES FOR UNDERDRAIN TYPES "B" AND "C" SHALL BE ASLEAST AS THICK AS THE LARGEST SIZE PIPE BEING CONNECTED.
3. THE INVERT ELEVATION OF UNDERDRAIN TYPE "B" OUTLETS SHALL BE A MINIMUM OF 6" ABOVE THE FLOW LINE OF A DITCH OR THE ORIGINAL GROUND.
4. WIDTH OF THE TRENCH FOR UNDERNEATH OUTLET WILL BE THE SAME AS THE UNDERDRAIN TRENCH.
5. NO ALLOWANCE FOR PAYMENT WILL BE MADE FOR EXCAVATING OR MATERIAL EXCAVATED BEYOND THE HORIZONTAL DIMENSIONS SHOWN FOR TYPES "B" OR "C" UNDERDRAIN.
6. IN "BOX SECTIONS" THE EDGE OF THE TRENCH SHALL BE IN LINE WITH THE EDGE OF BOX SECTION.

TYPE "C" UNDERDRAIN INSTALLATION DETAIL

N.T.S.

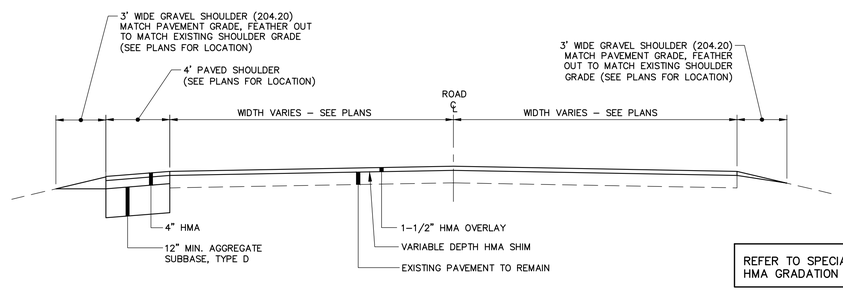

REFER TO SPECIAL PROVISION 403 FOR HMA GRADATION AND LIFT THICKNESS

TYPICAL PAVED ROAD (OVERLAY) SECTION

N.T.S.

NOTE: AGGREGATE TYPES PER MDOT SECTION 304.02

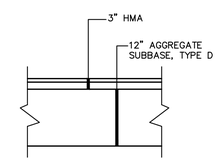

BITUMINOUS DRIVEWAY SECTION

N.T.S.

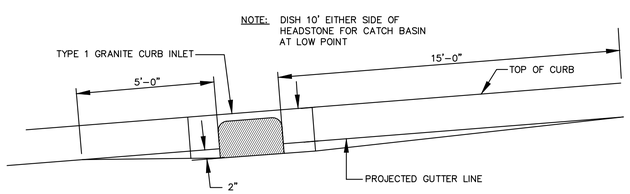

TYPICAL PAVEMENT GRADING FOR CATCH BASINS

N.T.S.

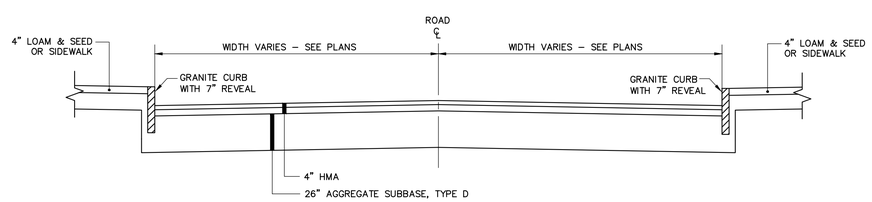

TYPICAL PAVED ROAD (FULL DEPTH) SECTION

N.T.S.

NOTE: AGGREGATE TYPES PER MDOT SECTION 304.02

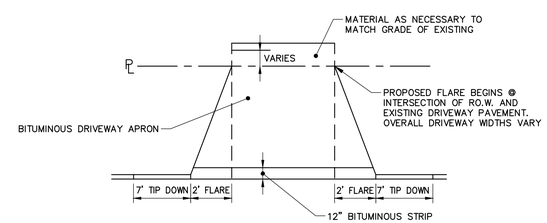

PLAN VIEW–DRIVEWAY CONSTRUCTION

N.T.S.

41 Hutchins Drive
Portland, Maine 04102
800.426.4262 | www.woodardcurran.com
WOODARD & CURRAN

COMMITMENT & INTEGRITY DRIVE RESULTS

THIS DOCUMENT, THE PROPERTY OF WOODARD & CURRAN INC. AND ITS CLIENT, IS INTENDED FOR THE USE OF THE CLIENT IN THE ENTIRETY, AS DESIGNED.

STATE OF MAINE
DAVID A. SENUS
10791
LICENSED
PROFESSIONAL ENGINEER
4/16/2015

REV	DESCRIPTION	DATE
A	ADDENDUM 1	4/16/2015

DESIGNED BY: MDLM
DRAWN BY: JBC
CHECKED BY: DAS
203970.19-C300A.DWG

CIVIL DETAILS – 1

CITY OF AUBURN
60 COURT STREET
AUBURN, ME 04210

RIVERSIDE DRIVE RECONSTRUCTION

JOB NO.: 203970.19
DATE: APRIL 2, 2015
SCALE: AS NOTED
SHEET: 23 OF 27

C400

O:\203970 City of Auburn–General Consulting Services\Task\19 Riverside Dr Recon\Drawings\Addendum 1\203970.19–C300A.dwg, Apr 15, 2015 – 11:05am

22x34 SHEET 1:1

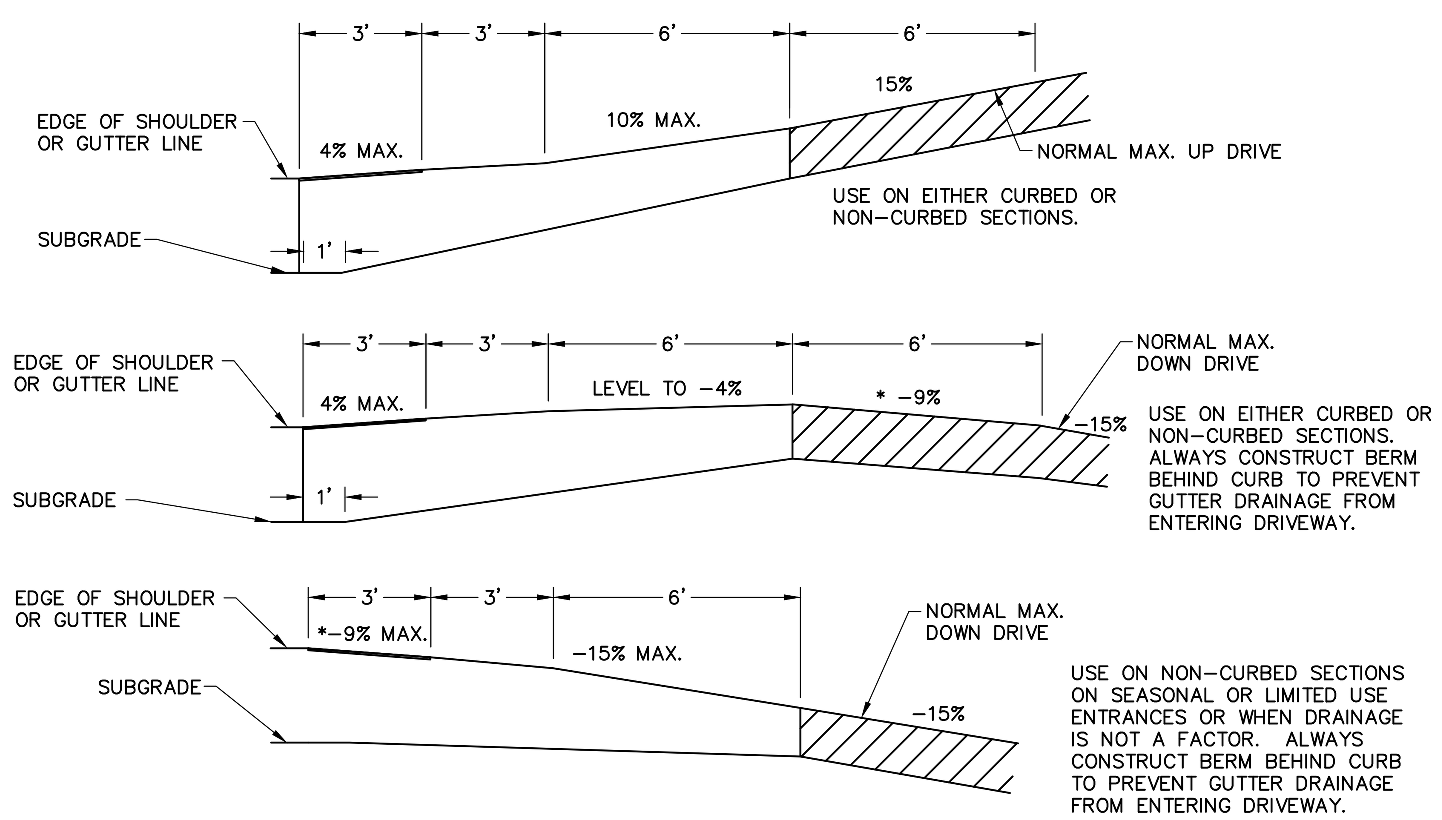

NOTES ON MAXIMUM DRIVEWAY PROFILES:

1. THESE PROFILES ARE A GUIDE FOR THE MAJORITY OF CASES, BUT SHOULD BE FIELD CHECKED WHEN THE MAIN LINE GRADE IS STEEP (4% TO 6% OR GREATER) OR THE ANGLE OF APPROACH TO THE DRIVE IS UNUSUAL.

2. GENERALLY THE MAJORITY OF DRIVES ON A PROJECT WILL BE BUILT WITH FLATTER PROFILES THAN THESE MAXIMUM CASES.

*3. WHEN GRADING DRIVES WHICH ARE FLATTER THAN THE MAXIMUM PROFILES THE FOLLOWING RULE OF THUMB SHOULD BE USED. DO NOT EXCEED A GRADE % CHANGE OF MORE THAN 9% IN A 6' INCREMENT OF DRIVEWAY LENGTH, THIS APPLIES TO BOTH UP AND DOWN PROFILES.

4. DRIVES WITH GRADES EXCEEDING 15% MUST HAVE A DESIGN EXCEPTIONS.

5. ANY DESIGN CHANGE TO AN EXISTING DRIVEWAY THAT ADVERSELY CHANGES THE GRADE (+ OR –) BY MORE THAN 3% WILL REQUIRE A DESIGN EXCEPTION.

DESIGN EXCEPTION TO BE APPROVED BY CITY.

GENERAL NOTES:

1. THE FIRST 3' SHOWN AS PAVEMENT SHALL BE PAVED ONLY WHEN ABUTTING A PAVED AREA.

2. ALL RESIDENTIAL OR COMMERCIAL DRIVES 10% AND OVER SHALL BE PAVED.

3. BERM AT DRIVEWAY ENTRANCE SHALL BE A 1" IN HEIGHT PAVEMENT LIP.

DRIVES ON NON-SIDEWALK SECTIONS

N.T.S.
(UNLESS SHOWN OTHERWISE ON CROSS-SECTIONS)

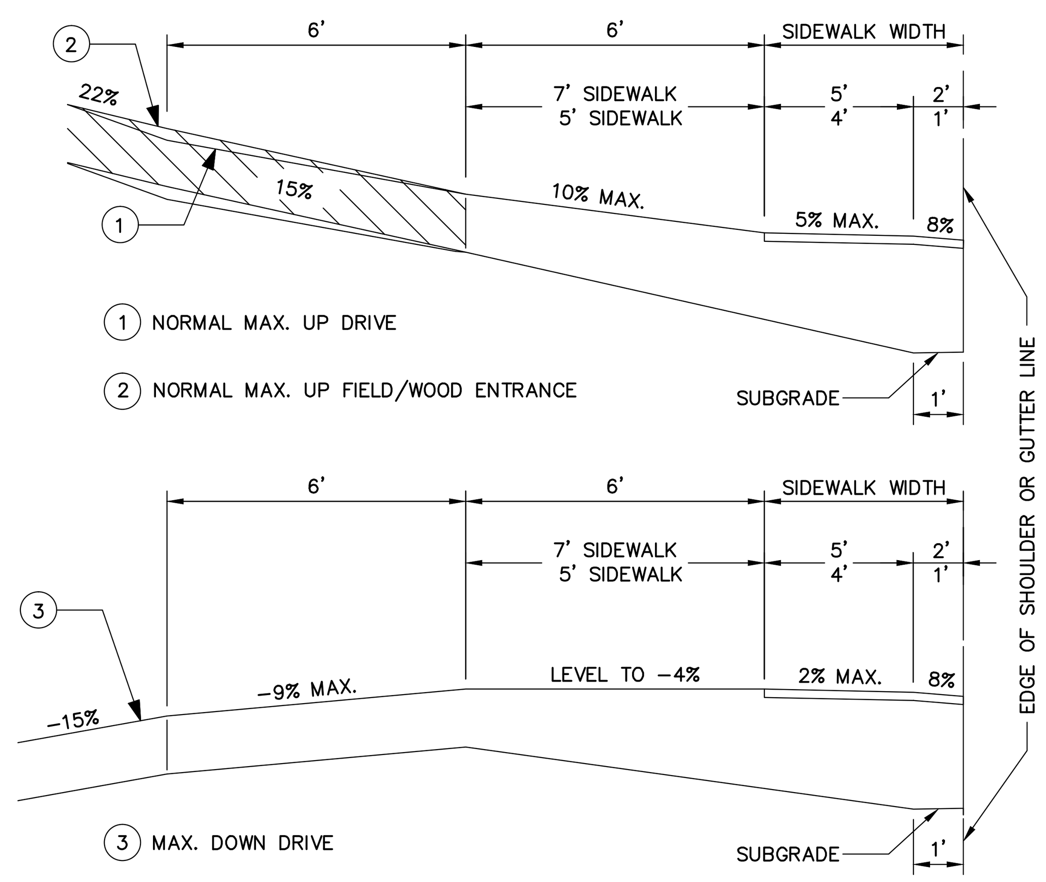

GENERAL NOTES:

1. THE SIDEWALK WIDTH SHALL BE PAVED IN ALL CASES.
2. ALL RESIDENTIAL OR COMMERCIAL DRIVES 10% AND OVER SHALL BE PAVED.

NOTES ON MAXIMUM DRIVEWAY PROFILES:

1. THESE PROFILES ARE A GUIDE FOR THE MAJORITY OF CASES, BUT SHOULD BE FIELD CHECKED WHEN MAIN LINE GRADE IS STEEP (4% TO 6% OR GREATER) OR THE ANGLE OF APPROACH TO THE DRIVE IS UNUSUAL.
2. GENERALLY THE MAJORITY OF DRIVES ON A PROJECT WILL BE BUILT WITH FLATTER PROFILED THAN THESE MAXIMUM CASES.

*3. WHEN GRADING DRIVES WHICH ARE FLATTER THAN THE MAXIMUM PROFILES THE FOLLOWING RULE OF THUMB SHOULD BE USED: DO NOT EXCEED A GRADE PERCENT CHANGES OF MORE THAN 9% IN A 6' INCREMENT OF DRIVEWAY LENGTH. THIS APPLIES TO BOTH UP AND DOWN PROFILES.

DRIVES ON SIDEWALK SECTION – 801(01)

N.T.S.
UNLESS SHOWN OTHERWISE ON CROSS-SECTIONS

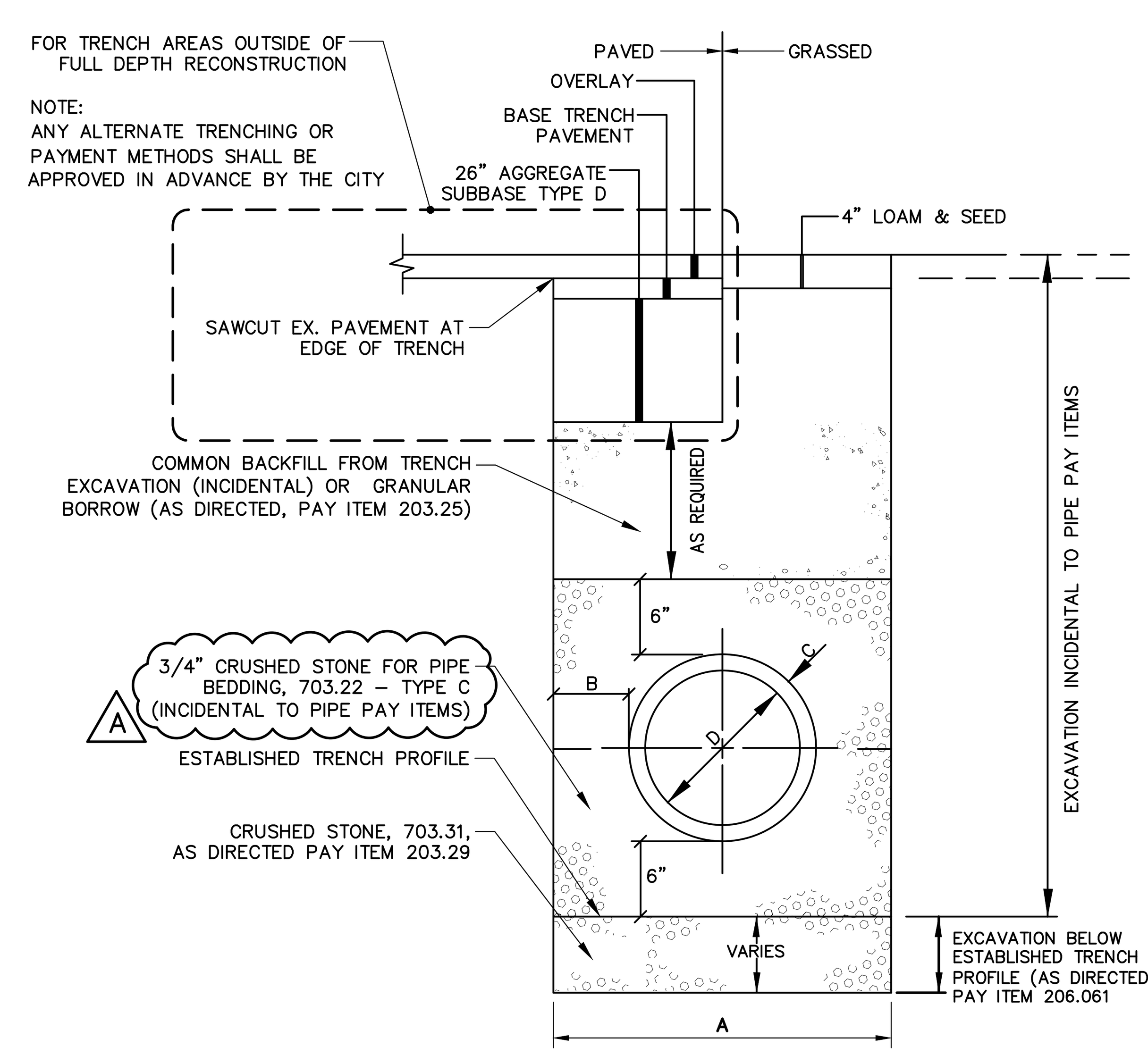

PIPE INSTALLATION DETAIL

N.T.S.

PIPE INSTALLATION DETAIL – NOTES

1. ALTERNATIVE CONSTRUCTION METHODS OR PAYMENT METHODS SHALL BE APPROVED IN ADVANCE.
2. IN PAVED AREAS, DEPTHS OF GRAVEL AND HOT MIX ASPHALT PAVEMENT SHALL MATCH THE GREATER OF EXISTING CONDITIONS OR THE REQUIREMENTS FOR THE CORRESPONDING STREET CLASSIFICATION.
3. DIMENSION "B" SHALL BE SUFFICIENT TO ALLOW CRUSHED STONE BEDDING TO BE PLACED AND COMPACTED UNDER THE HAUNCHES OF THE PIPE; BUT IN ALL CASES "B" SHALL BE AT LEAST 9".
4. DIMENSION "A" IS THE MAXIMUM WIDTH ALLOWED FOR CALCULATING PAY QUANTITIES UNDER ITEMS 203.25 GRANULAR BORROW, 203.29 CRUSHED STONE (OVERDEPTH), 206.061 STRUCTURAL EARTH EXCAVATION, BELOW GRADE AND 206.07 STRUCTURAL ROCK EXCAVATION. DIMENSION "A" SHALL BE BASED ON PIPE DIAMETER, AS SET FORTH IN THE FOLLOWING TABLE.

PIPE DIAMETER, "D" (INCHES)	MAX. TRENCH WIDTH, "A" (FEET)
6	4.0
8	4.0
10	4.0
12	4.0
15	4.0
18	5.0
21	5.0
24	5.5
27	6.0
30	6.0
36	7.0
42	8.0
48	8.0

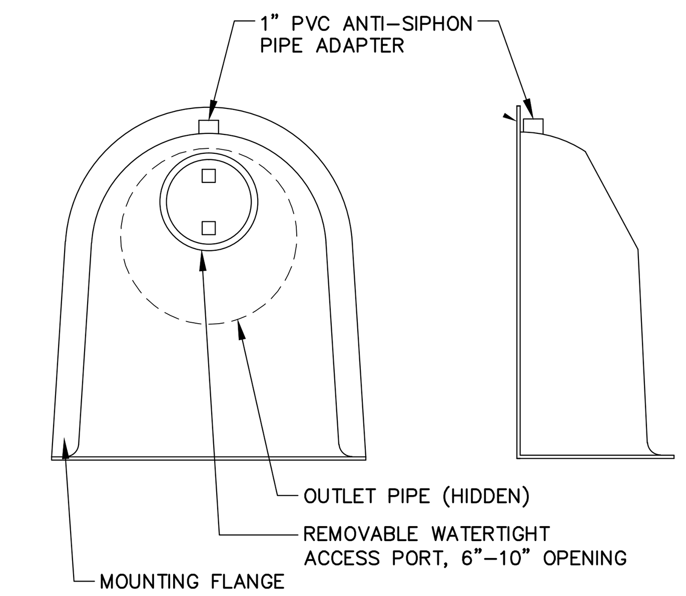

NOTES:

1. ALL HOODS AND TRAPS FOR CATCH BASINS AND WATER QUALITY STRUCTURES SHALL BE AS MANUFACTURED BY BEST MANAGEMENT PRODUCTS, INC. OR PRE-APPROVED EQUAL
2. ALL HOODS SHALL BE CONSTRUCTED OF A GLASS REINFORCED RESIN COMPOSITE WITH ISO GEL COAT EXTERIOR FINISH WITH A MINIMUM 0.125" LAMINATE THICKNESS.
3. ALL HOODS SHALL BE EQUIPPED WITH A WATERTIGHT ACCESS PORT, A MOUNTING FLANGE, AND AN ANTI-SIPHON VENT PIPE AND ELBOW.
4.
5. THE SIZE AND POSITION OF THE HOOD SHALL BE DETERMINED BY OUTLET PIPE SIZE AS PER MANUFACTURER'S RECOMMENDATION (SNOUT SIZE ALWAYS LARGER THAN PIPE SIZE).
6. THE BOTTOM OF THE HOOD SHALL EXTEND DOWNWARD A MINIMUM DISTANCE EQUAL TO 1/2 THE OUTLET PIPE DIAMETER WITH A MINIMUM DISTANCE OF 6" FOR PIPES <12" I.D.
7. THE ANTI-SIPHON VENT SHALL EXTEND ABOVE HOOD BY MINIMUM OF 3" AND A MAXIMUM OF 12" ACCORDING TO STRUCTURE CONFIGURATION.
8. THE SURFACE OF THE STRUCTURE WHERE THE HOOD IS MOUNTED SHALL BE FINISHED SMOOTH AND FREE OF LOOSE MATERIAL AND PIPE SHALL BE FINISHED FLUSH TO WALL.
9. THE HOOD SHALL BE SECURELY ATTACHED TO STRUCTURE WALL WITH 3/8' STAINLESS STEEL BOLTS AND OIL-RESISTANT GASKET AS SUPPLIED BY MANUFACTURER.
10. INSTALLATION INSTRUCTIONS SHALL BE FURNISHED WITH MANUFACTURER SUPPLIED INSTALLATION KIT. INSTALLATION KIT SHALL INCLUDE: INSTALLATION INSTRUCTIONS, PVC ANTI-SIPHON VENT PIPE AND ADAPTER, OIL-RESISTANT CRUSHED CELL FOAM GASKET WITH PSA BACKING, 3/8" STAINLESS STEEL BOLTS, AND ANCHOR SHIELDS.

SNOUT OIL-WATER-DEBRIS SEPARATOR DETAIL

N.T.S.

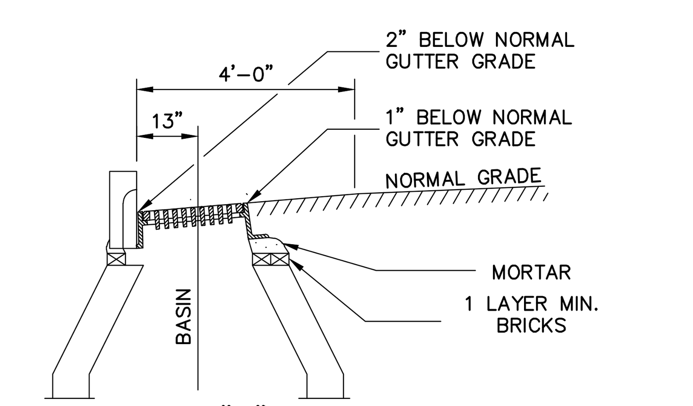

TYPE "A"
FOR USE WITH CURB TYPE 1

NOTES:
DIMENSIONS ARE INTENDED TO BE NOMINAL

CATCH BASIN TOP INSTALLATION

N.T.S.

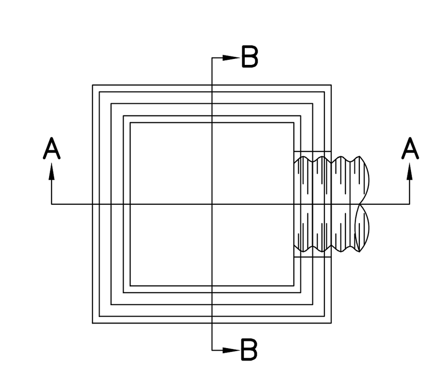

NOTE:
ENTIRE CATCH BASIN WITH EXCEPTION OF LEVELING BRICK, FRAME AND GRATE TO BE PRECAST AS A SINGLE PORTLAND CEMENT CONCRETE UNIT

*DIAMETER OF HOLE TO BE 3" LARGER THAN THE INSIDE DIAMETER OF FLEXIBLE PIPE OR THE OUTSIDE DIAMETER OF RIGID PIPE.

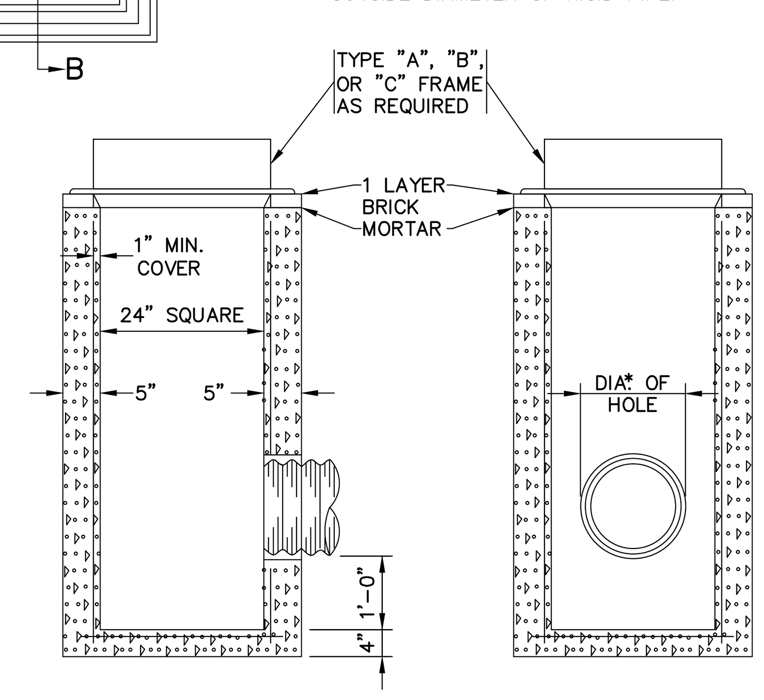

2' SQUARE AREA DRAIN (MDOT TYPE F)

N.T.S.

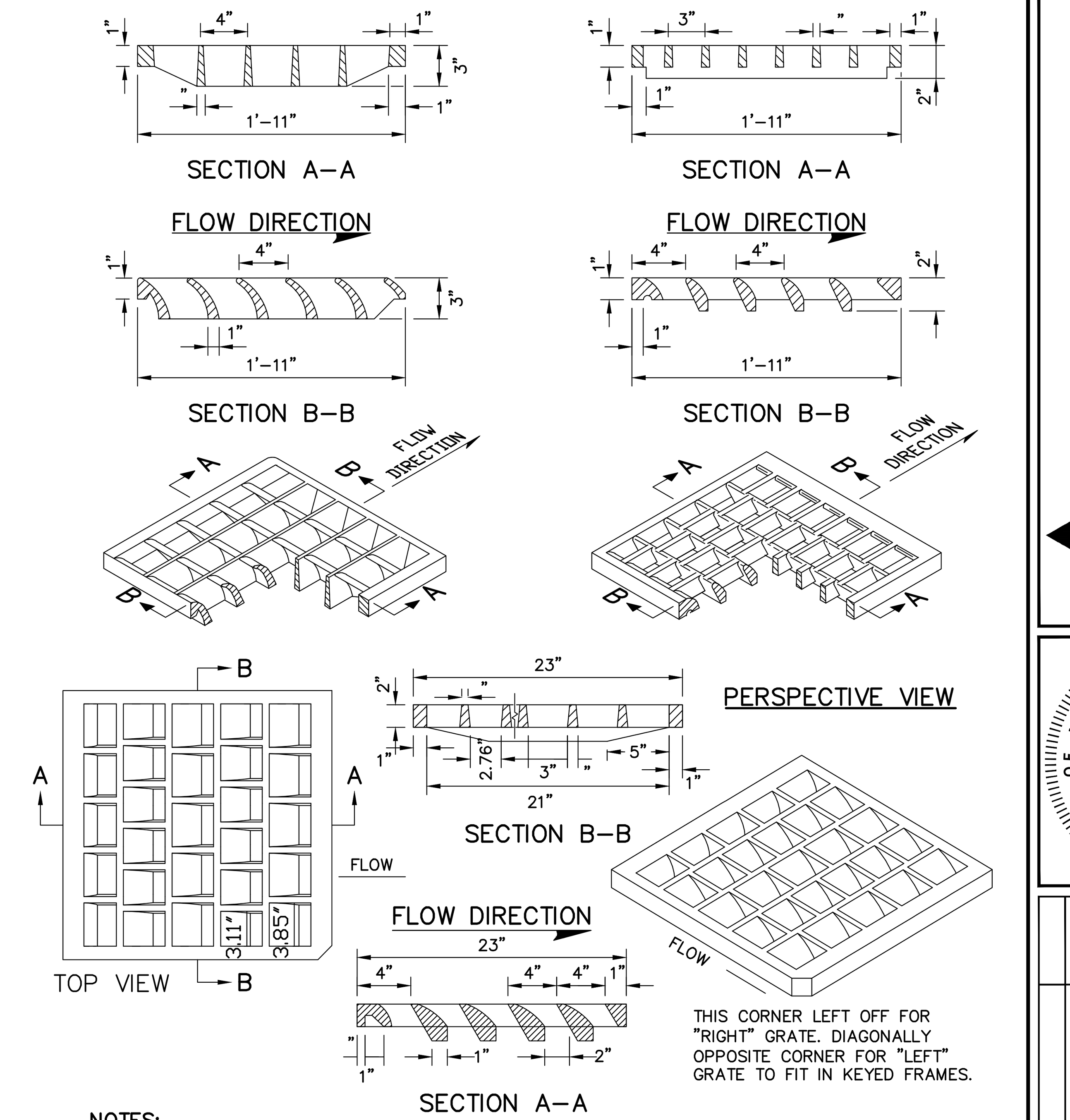

NOTES:
TO BE USED WHERE PARALLEL BAR GRATES WOULD PRESENT A HAZARD TO BICYCLE TRAFFIC. FOR USE ON CATCH BASIN TYPES: A1-C, A2-C, A5-C, B1-C, B2-C, B5-C, F3-C, F4-C, F5-C, F6-C.

"CASCADE-TYPE" GRATES

N.T.S.

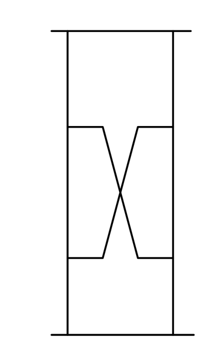

DETAIL "A"
ALTERNATE JOINT

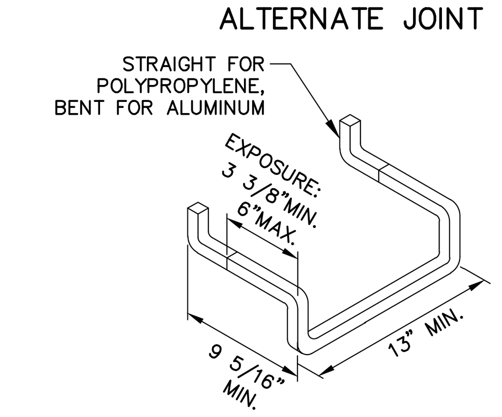

STEP

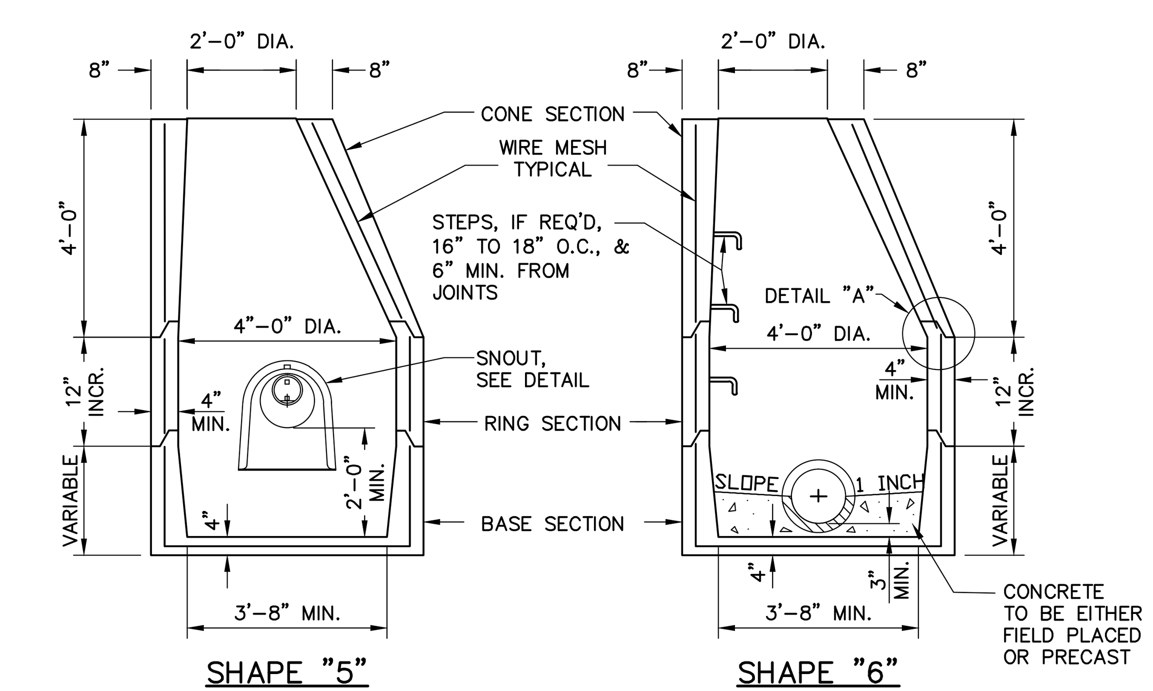

NOTES:

1. DIMENSIONS ARE INTENDED TO BE NOMINAL.
2. ALL ITEMS SHOWN IN DETAIL ARE INCIDENTAL TO CATCH BASIN PAY ITEM.

CATCH BASIN OR MANHOLE

N.T.S.

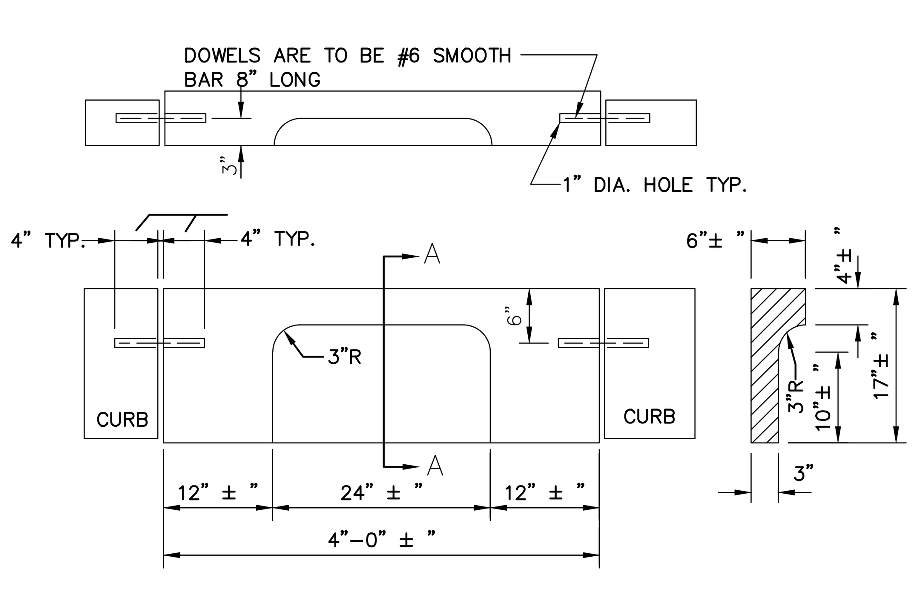

TYPE 1 GRANITE CURB INLET

N.T.S.

41 Hutchins Drive
Portland, Maine 04102
800.426.4262 | www.woodardcurran.com

COMMITMENT & INTEGRITY DRIVE RESULTS

WOODARD & CURRAN

THIS DOCUMENT IS THE PROPERTY OF WOODARD & CURRAN INC. AND ITS CLIENT. REPRODUCTION OR MODIFICATION WITHOUT WRITTEN PERMISSION IS PROHIBITED.

STATE OF MAINE — DAVID A. SENUS 10791 — LICENSED PROFESSIONAL ENGINEER

4/16/2015

REV	DESCRIPTION	DATE
A	ADDENDUM 1	4/16/2015

DESIGNED BY: MDLM
DRAWN BY: JBC
CHECKED BY: DAS
203970.19-C300A.DWG

CIVIL DETAILS – 2

CITY OF AUBURN
60 COURT STREET
AUBURN, ME 04210

RIVERSIDE DRIVE RECONSTRUCTION

JOB NO.: 203970.19
DATE: APRIL 2, 2015
SCALE: AS NOTED
SHEET: 24 OF 27

C401

O:\203970 City of Auburn-General Consulting Services\wip\19 Riverside Dr Recon\Drawings\Addendum 1\203970.19-C300A.dwg, Apr 15, 2015 – 11:05am