BID ADDENDUM NO. 1

City of Auburn, Maine
South Main Street Roadway Reconstruction: Phase III
April 1, 2016

Notice is hereby given that Addendum No. 1 provides further clarification for questions asked by Bidders before and during the Pre-Bid meeting held on March 29, 2016, and includes the Pre-bid attendance list. Bidders are instructed to acknowledge receipt of this Addendum by inserting its number and date in the "Acknowledgement of Bid Amendments".

Bidder Questions: The answers below are provided in response to questions and comments submitted by Bidders.

1. Question: Can you provide details for the precast box culvert? Could you clarify the testing requirements for the precast box culvert?
   Answer: The requirements of MaineDOT Standard Specifications Subsections 543.05 - *Facilities for Inspection* and 534.14 - *Process Control Test Cylinders* will not be required for the precast box culvert. Shop drawings for the precast box culvert shall be stamped and signed by a licensed Professional Engineer registered in the State of Maine; see Specification section of this Addendum for amendments to the specifications.

   Details for the precast box culvert have been added to the drawings; see Drawing section of this Addendum for amendments to the drawings.

2. Question: The structure table on Sheet C-201 identifies DMH 1 as a 4-foot diameter manhole, but it is located at the connection of the new box culvert and the existing stone culvert. Does this structure need to be upsized? Also, could you provide a detail for the concrete collar?
   Answer: DMH 1 is intended to be a precast riser extending from the top of the box culvert. Details of DMH 1 and the concrete collar have been added to the drawings; see Drawing section of this Addendum for amendments to the drawings.

   Contractor shall field verify the inverts of the existing stone box culvert and provide them to the City for review prior to ordering DMH 1, DMH 2, CB 9 and the precast box culvert.

3. Question: Will removal of the existing stone box culvert be paid for under Pay Item 202.16?
   Answer: No, Pay Item 202.161 has been added for the removal or infill of the existing stone box culvert; see Specification section of this Addendum for amendments to the specifications.

4. Question: Drawings call for 17 new catch basins, 11 of which require curb inlet stones. What is required for the other 6 catch basins?
   Answer: Curb inlets are required for all 17 catch basins; see Drawing section of this Addendum for amendments to the drawings.

5. Question: Will the Contractor be allowed to close South Main Street from block to block? If not, will a pay item for flaggers be added to the Bid Form?
   Answer: Closure of South Main Street may be considered on a limited basis. Contractor shall submit a Traffic Control Plan, which includes the use of variable message boards for any proposed closures, to the City for review and approval prior to construction.

   Flagger hours shall be paid for under Pay Item 625.36 – Work Zone Traffic Control; no separate pay item will be provided.

6. Question: What is the construction estimate for the project?
   Answer: The Engineer's Opinion of Probable Total Construction Cost is approximately $1,340,000.

7. Question: Who is responsible for the project, the City or MaineDOT?
   Answer: The project is being managed and administered by the City of Auburn and does not include any DBE or wage rate requirements.

8. Question: Have the contaminated soils been classified?
   Answer: Refer to Supplemental Specification Section 203 – *Excavation and Embankment (Contaminated Soil and Groundwater Management)* and the *Summary of Limited Subsurface Investigation for South Main Street Reconstruction* provided in Appendix A for information on the soil contaminations.

9. Question: Will a copy of the pre-bid meeting sign-up sheet be provided?
   Answer: Yes, please see attached.

10. Question: Will there be any work with the power company on this project?
    Answer: Yes, 17 utility poles have been identified for relocation. Contractor shall coordinate with Central Maine Power for the relocation of the utility poles. Additionally, Unitil anticipates lowering the gas main in South Main Street and will coordinate this work with the Contractor.

11. Question: The Bid Form states that Pay Item 608.26 will be paid for per each, but Supplemental Specification Section 608 states that the pay item will be paid for per square feet. Please clarify.
    Answer: Pay Item 608.26 - Curb Ramp Detectable Warning Field will be paid for at the contract unit price per each; see Specification section of this Addendum for amendments to the specifications.

12. Question: On the South Main Street project, does the contractor have to provide temporary water?
    Answer: No, Auburn Water & Sewerage Districts will provide all temporary services and coordinate all of the shut downs.

Specifications: Notice is hereby given that the specifications have been modified and replacement pages issued herewith. Replacement pages have a date of April 1, 2016, contain reference to "Addendum 1" in the header, and text changes for additions in ***bold italic*** and deletion identified by ~~strikeout~~.

Replacement pages included:

- Bid Form
- Supplemental Specification Section 202 – Removing of Structures and Obstructions
- Supplemental Specification Section 534 – Precast Structural Concrete
- Supplemental Specification Section 608 - Sidewalks

Drawings: Notice is hereby given that the Drawings have been modified and replacement sheets issued herewith. Replacement Drawings contain reference to "Addendum 1" in the title block, and changes identified by revision clouds.

Replacement sheets included:

- Sheet C204 Phase III Plan & Profile Sta. 5+50 – 10+00
- Sheet C205 Phase III Plan & Profile Sta.10+00 – 15+50
- Sheet C403 Civil Details - 4
- Sheet C500 Phase III Water Improvements Plan - 1
- Sheet C501 Phase III Water Improvements Plan - 2

2016 South Main Street Reconstruction Project Mandatory Pre-bid Meeting
Sign-in Sheet

Contractor	Name	Phone #	Email
Pike Ind	Jeff McCorkle	577-4787	lmorin@pikeindustries.com
Peters Construction	Tom Peters	929-8912	rowens@petersconst.com
Pratt and Sons	Ethan Davidson	345-3311	Art@prattandsons.net
GLIDDEN EX + PAVING	STEVEN PIELA	856-9990	steve@gliddenpaving.com
AMERICAN CONCRETE	BOB POIRIER	784-1588	bob@americanconcrete.com
LONGCHAMPS & SON'S	JIMMY LONGCHAMPS	353-2345	DENISE LONGCHAMPS AT G.MAIL
Gendron & Gendron	Josh White	782-7372	josh@gendroncorp.com
SARGENT Corp.	STEVE PERRY	827-4435	pdubay@sargent-corp.com
McGee Construction	Seth McGee	582-8810	SMcGee@McGeeConstruction.COM
McGee Construction	Tom Linindoll	582-8810	tlinindoll@mcgeeconstruction.com
~~Michael~~ AWSD	Michael Broadbent	607-9115	mbroadbent@awsd.org
C.H. STEVENSON, INC.	ADAM LAKE	685-3600	alake@chstevensoninc.com
St. Laurent & Son, Inc	Matt Callahan	784-7844	matt@stlaurentandson.com
St. Laurent and Son, Inc	Corey LaRue	784-7844	corey@stlaurentandson.com
CROSS EXCAVATION	CRAIG BABBIDGE	381-7567	craig@crossexcavation.COM

Specifications
Replacement Pages

BID PROPOSAL FORM

Due: Thursday, April 7th, 2016

To: City of Auburn
Derek Boulanger, Facilities Manager/Purchasing Agent
60 Court Street
Auburn, ME 04210

The undersigned individual/firm/business guarantees this price for Thirty days (30) from the bid due date. The undersigned submits this proposal without collusion with any other person, individual, or firm or agency. The undersigned ensures the authority to act on behalf of the corporation, partnership or individual they represent; and has read and agreed to all of the terms, requests, or conditions written herein by the City of Auburn, Maine. By signing this bid form, the firm listed below hereby affirms that its bid meets the minimum specifications and standards as listed above.

Signature _____Name (print) _____

Title_____Company_____

Address_____

Telephone No._____Fax No. _____

Email Address:_____

STATE OF MAINE
_____, SS. Date: _____

Personally appeared and acknowledged the foregoing instrument to be his/her free act and deed in his/her capacity and the free act and deed of said company.

Notary Public_____

Print Name_____
Commission Expires_____

Addendum Acknowledged:
#_____Date_____
#_____Date_____
#_____Date_____

City of Auburn

Roadway and Drainage Improvements Bid Form

ITEM NO.	DESCRIPTION	UNIT	QNTY	UNIT COST	TOTAL COST
201.23	Removing Single Tree Top Only	EA	3		
201.24	Removing Stump	EA	3		
202.15	Removing Existing Manhole or Catch Basin	EA	5		
202.16	Removing Existing Storm/Sewer Pipe	LF	200		
202.161	Removing Existing Stone Box Culvert	LF	210		
202.20	Removing Bituminous Concrete Pavement	SY	11,300		
202.203	Pavement Butt Joints	SY	100		
203.20	Common Excavation	CY	8,000		
203.28	Test Pit	EA	13		
203.2312	Health and Safety Plan (HASP)	LS	1		
203.2333	Disposal/Treatment of Special Excavation	TON	500		
203.29	Crushed Stone (Over Depth)	CY	250		
206.07	Structural Rock Excavation - Drainage & Minor Structures	CY	250		
304.10	Aggregate Subbase Course –Type D	CY	6,000		
304.14	Aggregate Base Course –Type A	CY	1,000		
304.141	Aggregate Base Course –Type A (Sidewalks & Drives)	CY	1,000		
403.208	Hot Mix Asphalt, 12.5 mm Nominal Maximum Size, Surface	TON	980		
403.209	Hot Mix Asphalt, 9.5 mm Nominal Maximum Size (sidewalks, drives, islands & incidentals)	TON	340		
403.213	Hot Mix Asphalt, 12.5 mm Nominal Maximum Size, Base	TON	1600		
409.15	Bituminous Tack Coat, Applied	GAL	2,300		
534.711	3' x 4' Box Culvert	LF	100		
603.159	12" Culvert Pipe Option III	LF	661		
603.169	15" Culvert Pipe Option III	LF	90		
603.239	48" Culvert Pipe Option III	LF	88		
604.157	120" Manhole	EA	1		
604.16	Altering Catch Basin to Manhole	EA	9		
604.161	Altering Catch Basin	EA	2		
604.18	Adjusting Manhole or Catch Basin to Grade	EA	22		
604.252	Catch Basin Type A5-C	EA	16		
604.2523	120" Catch Basin Type A5-C	EA	1		
605.09	6" Underdrain Type B	LF	2,506		

City of Auburn

Roadway and Drainage Improvements Bid Form

ITEM NO.	DESCRIPTION	UNIT	QNTY	UNIT COST	TOTAL COST
605.11	12" Underdrain Type C	LF	80		
608.26	Curb Ramp Detectable Warning Field	EA	32		
609.11	Vertical Curb Type 1	LF	2,000		
609.12	Vertical Curb Type 1 – Circular	LF	1,325		
609.237	Terminal Curb Type 1 - 7 Foot	EA	50		
609.238	Terminal Curb Type 1 - 8 Foot	EA	64		
615.08	Loam, Seed & Mulch	SY	5,250		
627.733	4" White or Yellow Painted Pavement Marking Line	LF	7,250		
627.75	White or Yellow Pavement & Curb Marking	SF	2,300		
645.251	Roadside Sign and Pole	EA	1		
652.36	Work Zone Traffic Control	LS	1		
659.10	Mobilization	LS	1		
TOTAL AMOUNT OF BID WRITTEN AND IN NUMBERS BASED ON ESTIMATE OF QUANTITIES					
(Written)					

Auburn Water and Sewerage Districts

Water and Sewer Improvements Bid Form

ITEM NO.	DESCRIPTION	UNIT	QUANTITY	UNIT COST	TOTAL COST
203.29	Crushed Stone (Over Depth)	CY	100		
206.07	Structural Rock Excavation-Drainage & Minor Structures	CY	100		
604.151	Remove and Replace Sewer Manhole	EA	1		
824.29	Demolishing Existing Hydrant Assembly	EA	1		
824.30	Install Hydrant Assembly	EA	1		
830.01	Install 2" PVCO Water Main	LF	100		
830.02	Install 6" PVCO Water Main	LF	300		
830.03	Install 12" PVCO Water Main	LF	1300		
830.04	Install Tee	EA	8		
830.05	Install Gate Valve	EA	4		
830.06	Install Water Service – Shortside	EA	8		
830.07	Install Water Service – Longside	EA	10		
TOTAL AMOUNT OF BID WRITTEN AND IN NUMBERS BASED ON ESTIMATE OF QUANTITIES					
(Written)					

BASIS OF AWARD BID FORM SOUTH MAIN STREET ROADWAY RECONSTRUCTION PROJECT AUBURN, MAINE	
Total of Roadway and Drainage Improvements Bid Written in Numbers	$
Total of Water and Sewer Improvements Bid Written in Numbers	$
TOTAL: BASIS OF AWARD	**$**

Company Name: _____

Signed by: _____

Title: _____

Print Name: _____

Address: _____

Tel. # _____Fax # _____

Date: _____

SUPPLEMENTAL SPECIFICATIONS
SECTION 202 - REMOVING OF STRUCTURES AND OBSTRUCTIONS

The provisions of Section 202 of the Standard Specifications shall apply with the following additions and modifications:

202.01 Description

This work shall consist of the removal of the surface of the bituminous concrete pavement to the depth, width, grade and cross sections as directed by the Engineer. Removal of existing pavement shall include roadway, driveway and sidewalk pavement.

202.061 Removing Material

The equipment for removing the bituminous surface shall be a power operating planing machine or grinder capable of removing the bituminous concrete pavement to the required depth. The equipment shall be capable of accurately establishing profile grade by referencing from either the existing paving or from an independent grade control and shall have a positive means for removing excess material from the surface and for preventing accidents from flying material in compliance with subsection 107.24, Safety and Accident Prevention, of the Standard Specification. Pavement millings shall become the property of the contractor and shall be disposed of in an approved location

202.07 Method of Measurement

Measurement shall be in accordance with MaineDOT Standard Specifications Subsection 202.07. This subsection shall be amended by the addition of the following paragraphs:

Removing existing storm and sewer pipes shall be measured per linear foot.

Removing existing stone box culvert shall be measured per linear foot.

Pavement butt joints for driveways will be considered incidental to the contract and will not require measurement.

Saw cutting pavement is incidental to the contract pay item 202.20 and shall not require measurement.

202.08 Basis of Payment

The Basis of Payment shall be in accordance with MaineDOT Standard Specifications Subsection 202.08. This subsection shall be amended by the addition of the following paragraphs:

The accepted quantity of removal of existing storm and sewer pipe shall be at the contract unit price per linear foot, which will be full compensation for removal of a pipe outside the horizontal limits of excavation for a proposed pipe or structure by four or more feet. Removal of existing pipe within four feet of the horizontal limits of excavation for a proposed pipe will be considered incidental to that applicable pipe pay item.

The accepted quantity of removal of existing stone box culvert shall be at the contract unit price per linear foot, which will be full compensation for the removal and backfilling of the stone box culvert. Removal of the stone box culvert top and infilling culvert structure will be considered an acceptable alternative.

Pavement butt joints for driveways will be considered incidental to the contract and will not require payment.

Pay Item	Item Description	Pay Unit
202.15	Removing Existing Manhole or Catch Basin	Each
202.16	Removing Existing Storm/Sewer Pipe	Linear Foot
202.161	***Removing Existing Stone Box Culvert***	***Linear Foot***
202.20	Removing Bituminous Concrete Pavement	Square Yard
202.203	Pavement Butt Joint	Square Yard

SUPPLEMENTAL SPECIFICATIONS
SECTION 534 – PRECAST STRUCTURAL CONCRETE

The provisions of Section 534 of the Standard Specifications shall apply with the following additions and modifications.

534.01 Description
This work shall consist of furnishing and installing precast concrete structures, including box culverts, as indicated on the plans, details and as specified herein.

534.021 Quality Assurance
Precast concrete structures shall be provided by a manufacturer with no less than 5 years of experience in the production of precast concrete structures.

Precast culverts shall conform to the requirements of ASTM Specification C 1433, "Standard Specification for Precast Reinforced Concrete Monolithic Box Sections for Culverts, Storm Drains, and Sewers."

534.031 Submittals
Contractor shall submit detailed fabrication and installation shop drawings of all precast structural concrete units to the Resident for review and approval. Drawings shall include, but not limited to, plans, elevations, dimensions, shapes, cross sections, openings, extent and location of each finish, connections, support conditions, types of reinforcement, and all design loads. ***Shop drawings shall be stamped and signed by a licensed Professional Engineer registered in the State of Maine.***

534.04 Design Requirements
The internal clear dimensions of the box culvert be 4-feet wide and 3-feet high.

534.21 Method of Measurement
Precast concrete box culvert satisfactorily placed and accepted will be measured per linear foot.

534.22 Basis of Payment
This subsection shall be amended by the addition of the following paragraph:

The accepted quantities of box culvert will be paid for at the contract unit price per linear foot, complete in place. Excavation for box culvert, including excavation below the culvert, trench and for bedding and backfilling will be considered incidental to the culvert item.

Pay Item	Item Description	Pay Unit
534.711	3' x 4' Box Culvert	Linear Foot

SUPPLEMENTAL SPECIFICATIONS
SECTION 608 – SIDEWALKS

The provisions of Section 608 of the Standard Specifications shall apply with the following additions and modifications.

608.01 Description

This item shall consist of constructing the concrete portion of the sidewalk ramp at an intersecting street. The bid price shall include all necessary work to install concrete (precast acceptable) and truncated domes. Work shall follow Section 608 of MDOT Standard Details, November 2014 edition and current ADA specifications.

608.05 Method of Measurement

Detectable warning fields properly placed and accepted shall be measured for payment by ~~the square foot~~ ***each measuring 2' x 4'***. Measurement shall include actual plate area, not surrounding concrete.

608.06 Basis of Payment

This subsection shall be amended by the addition of the following paragraph:

The accepted quantities of curb ramp detectable warning field will be paid for at the Contract Unit price per ~~square foot~~ ***each*** for all labor, materials, and equipment required for the installation and shall include concrete and cast iron truncated dome ***(2'x4').***

Pay Item	Item Description	Pay Unit
608.26	Curb Ramp Detectable Warning Field	~~Square Foot~~ ***Each***

Drawings
Replacement Sheets

22x34 SHEET
1:1

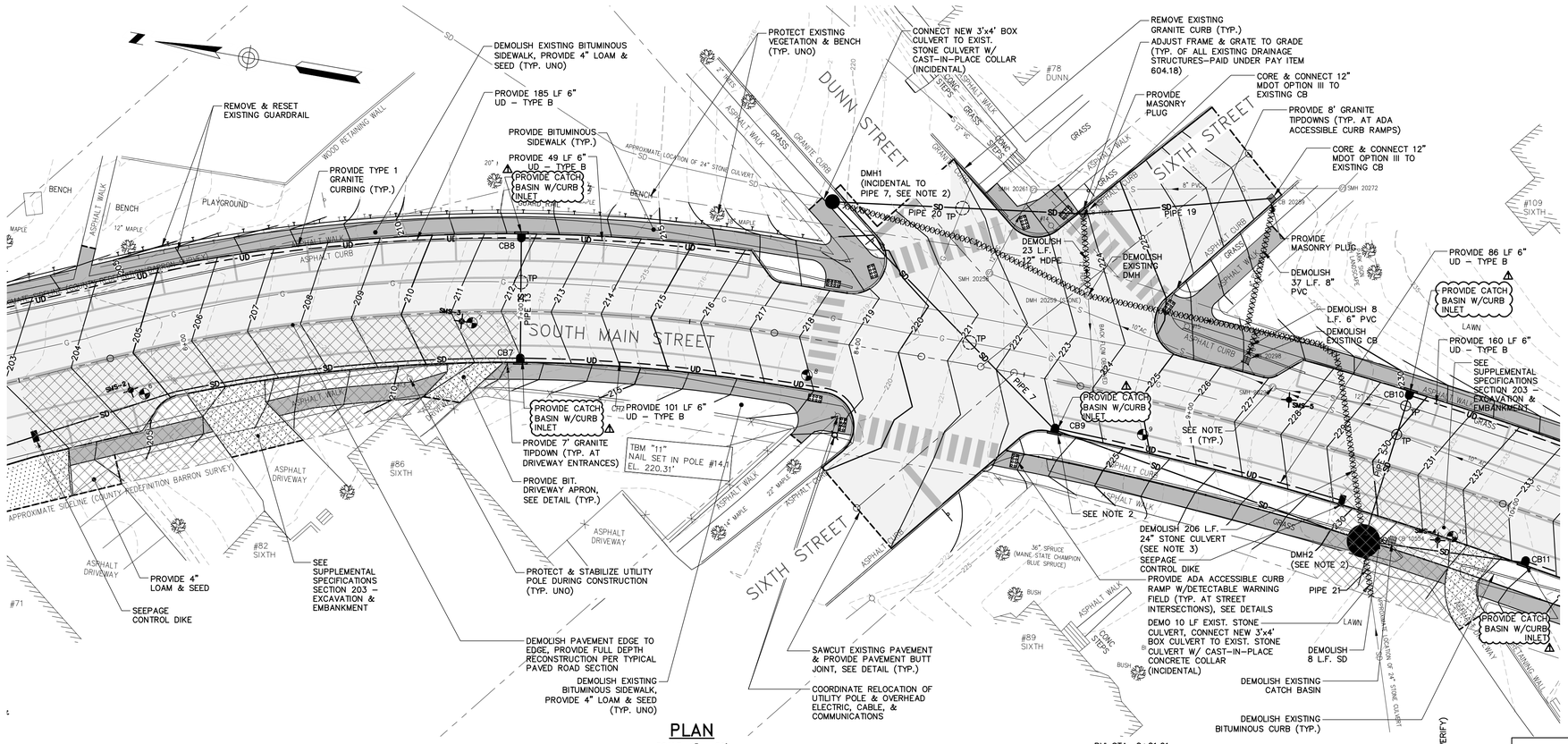

PLAN

SCALE: 1" = 20'
REFER TO SHEETS C100 TO C103 FOR LAYOUT, PAVEMENT MARKINGS AND SIGNAGE INFORMATION.

PLAN NOTES:

1. FOR ALL EXISTING SEWER MANHOLES, CONTRACTOR SHALL REMOVE COVER AND FRAME AND PROVIDE STEEL PLATE TO COVER OPENING. OFFSETS SHALL BE INSTALLED TO DETERMINED LOCATION. THE AUBURN WATER AND SEWERAGE DISTRICT WILL BE RESPONSIBLE FOR ADJUSTING FRAME AND COVER TO GRADE, INCLUDING EXISTING CURB STOPS TO REMAIN (INCIDENTAL TO CONTRACT).
2. FIELD VERIFY INVERTS OF EXISTING STONE CULVERT AND PROVIDE TO RESIDENT FOR REVIEW AND APPROVAL PRIOR TO ORDERING STRUCTURES DMH1, DMH2 AND CB9 AND PIPES 7 & 21. NOTIFY RESIDENT OF ANY CONFLICTS.
3. CONTRACTOR OPTION: DEMOLITION OF STONE CULVERT MAY INCLUDE REMOVAL OF CULVERT TOP AND INFILLING STRUCTURE.

PIPE TABLE			
PIPE NAME	SIZE	LENGTH	SLOPE
PIPE 5	12" MDOT OPTION III	39'	0.0179
PIPE 7	3'x4' BOX CULVERT	88'	0.0109
PIPE 13	12" MDOT OPTION III	32'	0.0025
PIPE 19	12" MDOT OPTION III	52'	0.0991
PIPE 20	12" MDOT OPTION III	70'	0.0481
PIPE 21	3'x4' BOX CULVERT	12'	*

* CONNECT TO EXISTING STONE CULVERT

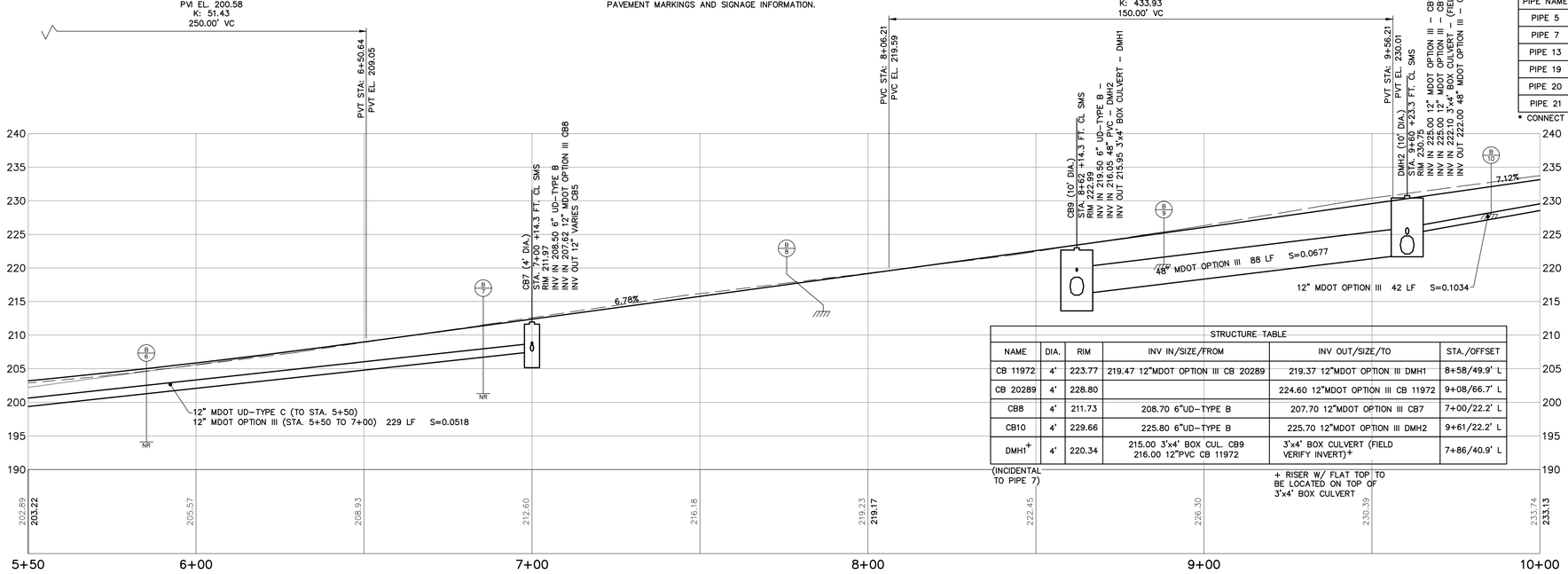

STRUCTURE TABLE					
NAME	DIA.	RIM	INV IN/SIZE/FROM	INV OUT/SIZE/TO	STA./OFFSET
CB 11972	4'	223.77	219.47 12"MDOT OPTION III CB 20289	219.37 12"MDOT OPTION III DMH1	8+58/49.9' L
CB 20289	4'	228.80		224.60 12"MDOT OPTION III CB 11972	9+08/66.7' L
CB8	4'	211.73	208.70 6"UD–TYPE B	207.70 12"MDOT OPTION III CB7	7+00/22.2' L
CB10	4'	229.66	225.80 6"UD–TYPE B	225.70 12"MDOT OPTION III DMH2	9+61/22.2' L
DMH1+	4'	220.34	215.00 3'x4' BOX CUL. CB9 216.00 12"PVC CB 11972	3'x4' BOX CULVERT (FIELD VERIFY INVERT)+	7+86/40.9' L

(INCIDENTAL TO PIPE 7)

+ RISER W/ FLAT TOP TO BE LOCATED ON TOP OF 3'x4' BOX CULVERT

NOTE: TYPE B UNDERDRAIN AND OTHER DRAINAGE PIPES NOT SHOWN IN PROFILE FOR CLARITY, SEE PLAN AND STRUCTURE TABLE FOR LENGTH, SLOPE AND INVERTS.

PROFILE STA. 5+50 TO STA. 10+00

HORIZONTAL SCALE: 1" = 20'
VERTICAL SCALE: 1" = 10'

BAR SCALE
1" = 20'
CHECK GRAPHIC SCALE BEFORE USING

41 Hutchins Drive
Portland, Maine 04102
800.426.4262 | www.woodardcurran.com
COMMITMENT & INTEGRITY DRIVE RESULTS
WOODARD & CURRAN

THIS DOCUMENT IS THE PROPERTY OF WOODARD & CURRAN INC. AND ITS CLIENT. THIS DOCUMENT MAY NOT BE REPRODUCED OR TRANSMITTED WITHOUT WRITTEN PERMISSION.

STATE OF MAINE
MEGAN D.L. MCDEVITT
13019
LICENSED PROFESSIONAL ENGINEER
3/17/2016

REV	DESCRIPTION	DATE
1	ADDENDUM 1	4/1/2016
0	ISSUED FOR BID	3/17/2016

DESIGNED BY: BCM/MDLM
DRAWN BY: BCM
CHECKED BY: MDLD
203970.25–C205–203.DWG

PHASE III
PLAN & PROFILE
STA. 5+50 – 10+00

CITY OF AUBURN
60 COURT STREET
AUBURN, ME 04210

SOUTH MAIN STREET RECONSTRUCTION
PHASE III

JOB NO.: 224606.15
DATE: MARCH 2016
SCALE: AS NOTED
SHEET: 8 OF 22

C201

Z:\224606 Auburn – Gen Eng Services\wip\15 South Main Street Phase 3\Drawings\design drawings\203970.25–C200–203.dwg, Mar 31, 2016 – 3:01pm

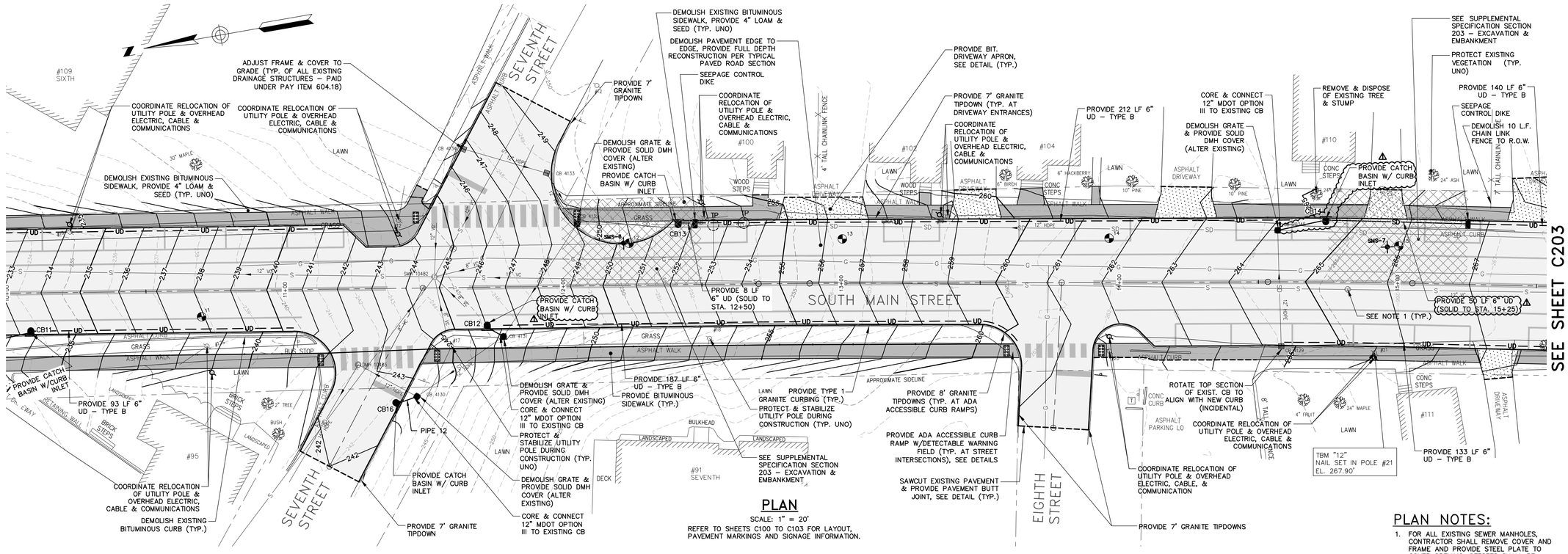

PLAN

SCALE: 1" = 20'

REFER TO SHEETS C100 TO C103 FOR LAYOUT, PAVEMENT MARKINGS AND SIGNAGE INFORMATION.

STRUCTURE TABLE					
NAME	DIA.	RIM	INV IN/SIZE/FROM	INV OUT/SIZE/TO	STA./OFFSET
CB 4130*	4'	243.60	237.50 12"HDPE CB 4131 238.47 12"MDOT OPTION III CB16	237.48 12"HDPE DMH 10485	11+47/39.0' R
CB16	4'	242.70		238.50 12"MDOT OPTION III CB 4130	11+40/41.4' R

*ALTER EXISTING

PIPE TABLE			
PIPE NAME	SIZE	LENGTH	SLOPE
PIPE 12	12" MDOT OPTION III	3'	0.0086

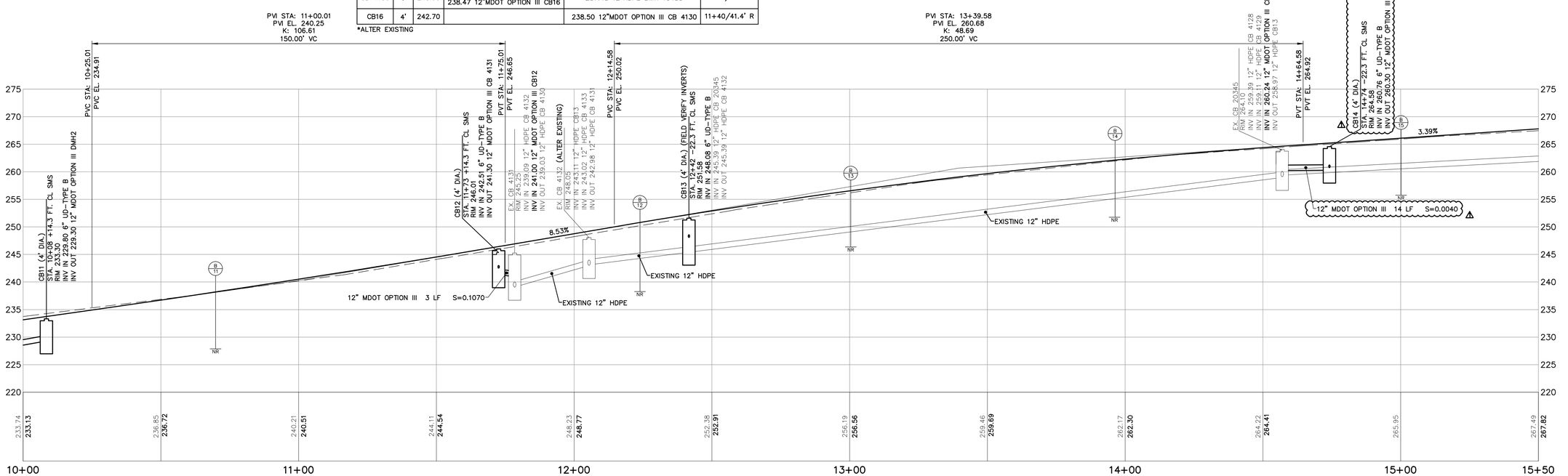

NOTE: TYPE B UNDERDRAIN AND OTHER DRAINAGE PIPES NOT SHOWN IN PROFILE FOR CLARITY, SEE PLAN AND STRUCTURE TABLE FOR LENGTH, SLOPE AND INVERTS.

PROFILE STA. 10+00 TO STA. 15+50

HORIZONTAL SCALE: 1" = 20'
VERTICAL SCALE: 1" = 10'

BAR SCALE
1" = 20'
CHECK GRAPHIC SCALE BEFORE USING

PLAN NOTES:

1. FOR ALL EXISTING SEWER MANHOLES, CONTRACTOR SHALL REMOVE COVER AND FRAME AND PROVIDE STEEL PLATE TO COVER OPENING. OFFSETS SHALL BE INSTALLED TO DETERMINED LOCATION. THE AUBURN WATER AND SEWERAGE DISTRICT WILL BE RESPONSIBLE FOR ADJUSTING FRAME AND COVER TO GRADE, INCLUDING EXISTING CURB STOPS TO REMAIN (INCIDENTAL TO CONTRACT).

41 Hutchins Drive
Portland, Maine 04102
800.426.4262 | www.woodardcurran.com
COMMITMENT & INTEGRITY DRIVE RESULTS
WOODARD & CURRAN

THIS DOCUMENT IS THE PROPERTY OF WOODARD & CURRAN INC. AND ITS CLIENT. THIS DOCUMENT MAY NOT BE REPRODUCED OR TRANSMITTED WITHOUT WRITTEN PERMISSION.

STATE OF MAINE
MEGAN D.L. MCDEVITT
13019
PROFESSIONAL ENGINEER
3/17/2016

REV	DESCRIPTION	DATE
1	ADDENDUM 1	4/1/2016
0	ISSUED FOR BID	3/17/2016

DESIGNED BY: BCM/ADLM | CHECKED BY: MDLD
DRAWN BY: BCM | 203970.25–C200–203.DWG

PLAN & PROFILE
STA. 10+00 – 15+50

CITY OF AUBURN
60 COURT STREET
AUBURN, ME 04210

SOUTH MAIN STREET RECONSTRUCTION
PHASE III

JOB NO.: 224606.15
DATE: MARCH 2016
SCALE: AS NOTED
SHEET: 9 OF 22

C202

Z:\224606 Auburn – Gen Eng Services\wip\15 South Main Street Phase 3\Drawings\design drawings\203970.25–C200–203.dwg, Mar 31, 2016 – 3:01pm

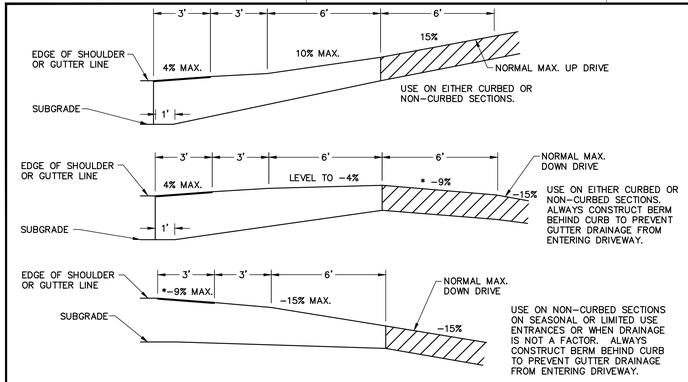

NOTES ON MAXIMUM DRIVEWAY PROFILES:

1. THESE PROFILES ARE A GUIDE FOR THE MAJORITY OF CASES, BUT SHOULD BE FIELD CHECKED WHEN THE MAIN LINE GRADE IS STEEP (4% TO 6% OR GREATER) OR THE ANGLE OF APPROACH TO THE DRIVE IS UNUSUAL.

2. GENERALLY THE MAJORITY OF DRIVES ON A PROJECT WILL BE BUILT WITH FLATTER PROFILES THAN THESE MAXIMUM CASES.

*3. WHEN GRADING DRIVES WHICH ARE FLATTER THAN THE MAXIMUM PROFILES THE FOLLOWING RULE OF THUMB SHOULD BE USED. DO NOT EXCEED A GRADE % CHANGE OF MORE THAN 9% IN A 6' INCREMENT OF DRIVEWAY LENGTH, THIS APPLIES TO BOTH UP AND DOWN PROFILES.

4. DRIVES WITH GRADES EXCEEDING 15% MUST HAVE A DESIGN EXCEPTIONS.

5. ANY DESIGN CHANGE TO AN EXISTING DRIVEWAY THAT ADVERSELY CHANGES THE GRADE (+ OR −) BY MORE THAN 3% WILL REQUIRE A DESIGN EXCEPTION.

DESIGN EXCEPTION TO BE APPROVED BY CITY.

GENERAL NOTES:

1. THE FIRST 3' SHOWN AS PAVEMENT SHALL BE PAVED ONLY WHEN ABUTTING A PAVED AREA.
2. ALL RESIDENTIAL OR COMMERCIAL DRIVES 10% AND OVER SHALL BE PAVED.
3. BERM AT DRIVEWAY ENTRANCE SHALL BE A 1" IN HEIGHT PAVEMENT LIP.

DRIVES ON NON-SIDEWALK SECTIONS

N.T.S.

PROVIDE MAXIMUM SLOPES PER DETAIL UNLESS OTHERWISE SHOWN ON CROSS-SECTIONS

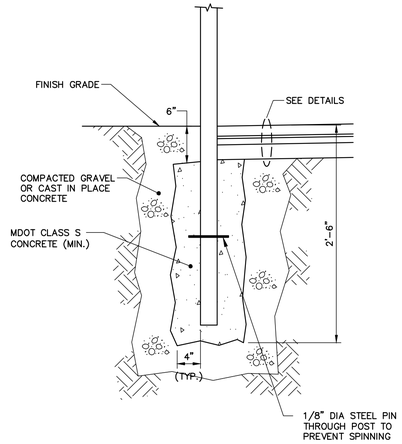

POST SPECIFICATION			
TYPE	HEIGHT ABOVE FIN. GRADE	POST DIAMATER	POST MATERIAL
STREET SIGNAGE	7'-0"	2 3/8" (O.D.)	GALV. STEEL

TYPICAL SIGN POST DETAIL

N.T.S.

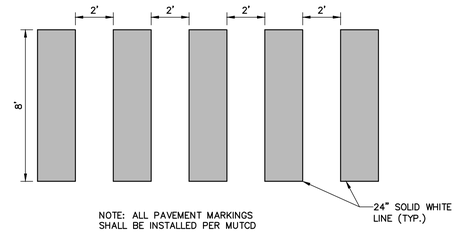

CROSSWALK DETAIL

N.T.S.

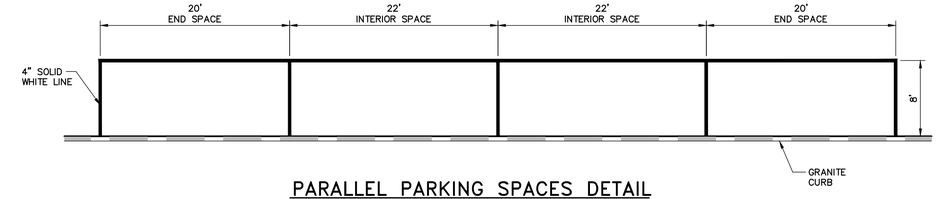

PARALLEL PARKING SPACES DETAIL

N.T.S.

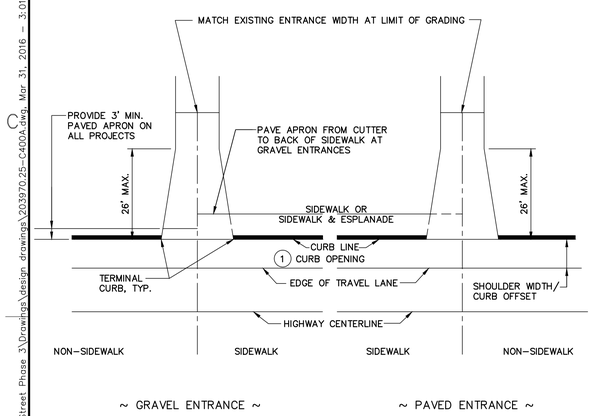

1 MINIMUM CURB OPENING IS 20' WHERE THE SHOULDER WIDTH IS GREATER THAN 6.5' AND 26' WHERE THE SHOULDER WIDTH IS LESS THAN 6.5'

RESIDENTIAL ENTRANCE ONTO CURBED HIGHWAY WITH/WITHOUT SIDEWALKS – 801(06)

N.T.S.

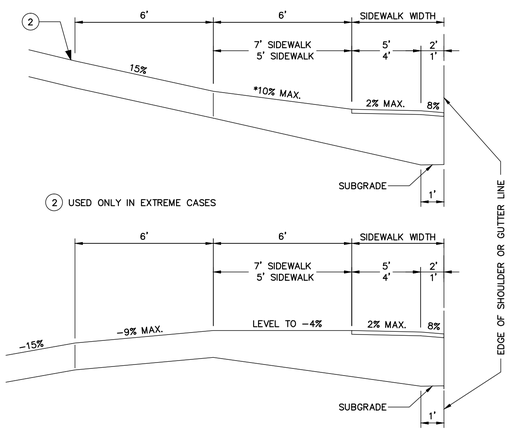

GENERAL NOTES:
1. THE SIDEWALK WIDTH SHALL BE PAVED IN ALL CASES.

2. ALL RESIDENTIAL OR COMMERCIAL DRIVES 10% AND OVER SHALL BE PAVED.

NOTES ON MAXIMUM DRIVEWAY PROFILES:
1. THESE PROFILES ARE A GUIDE FOR THE MAJORITY OF CASES, BUT SHOULD BE FIELD CHECKED WHEN MAIN LINE GRADE IS STEEP (4% TO 6% OR GREATER) OR THE ANGLE OF APPROACH TO THE DRIVE IS UNUSUAL.

2. GENERALLY THE MAJORITY OF DRIVES ON A PROJECT WILL BE BUILT WITH FLATTER PROFILED THAN THESE MAXIMUM CASES.

*3. WHEN GRADING DRIVES WHICH ARE FLATTER THAN THE MAXIMUM PROFILES THE FOLLOWING RULE OF THUMB SHOULD BE USED: DO NOT EXCEED A GRADE PERCENT CHANGES OF MORE THAN 9% IN A 6' INCREMENT OF DRIVEWAY LENGTH. THIS APPLIES TO BOTH UP AND DOWN PROFILES.

DRIVES ON SIDEWALK SECTION – 801(01)

N.T.S.

PROVIDE MAXIMUM SLOPES PER DETAIL UNLESS OTHERWISE SHOWN ON CROSS-SECTIONS

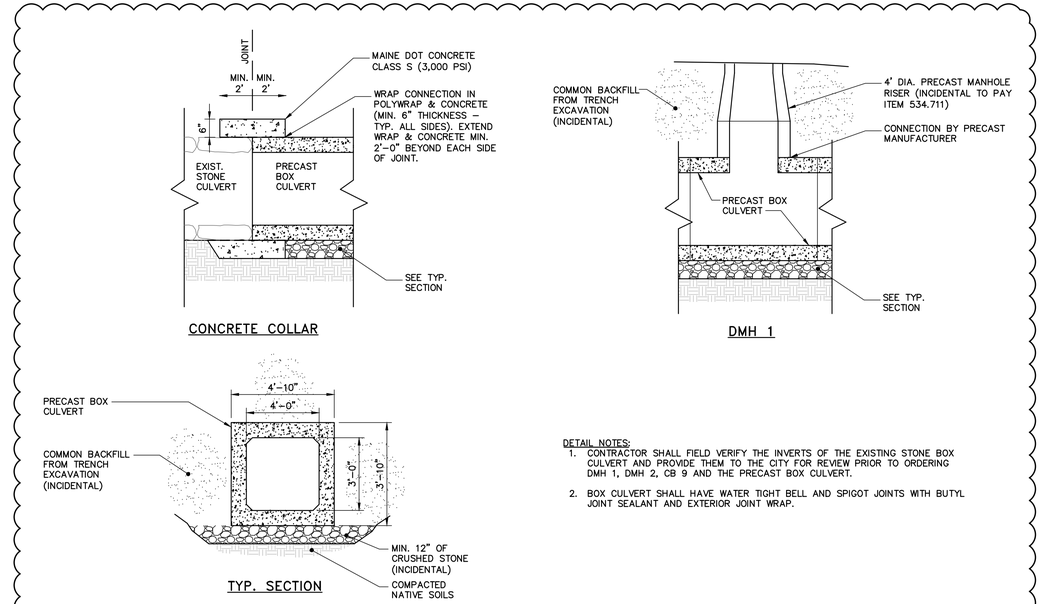

DETAIL NOTES:
1. CONTRACTOR SHALL FIELD VERIFY THE INVERTS OF THE EXISTING STONE BOX CULVERT AND PROVIDE THEM TO THE CITY FOR REVIEW PRIOR TO ORDERING DMH 1, DMH 2, CB 9 AND THE PRECAST BOX CULVERT.

2. BOX CULVERT SHALL HAVE WATER TIGHT BELL AND SPIGOT JOINTS WITH BUTYL JOINT SEALANT AND EXTERIOR JOINT WRAP.

PRECAST BOX CULVERT DETAILS

N.T.S.

41 Hutchins Drive
Portland, Maine 04102
800.426.4262 | www.woodardcurran.com
WOODARD & CURRAN
COMMITMENT & INTEGRITY DRIVE RESULTS

THIS DOCUMENT IS THE PROPERTY OF WOODARD & CURRAN INC. AND ITS CLIENT. THIS DOCUMENT MAY NOT BE REPRODUCED OR TRANSMITTED IN WHOLE OR IN PART, WITHOUT THE WRITTEN PERMISSION OF WOODARD & CURRAN INC.

STATE OF MAINE
MEGAN D.L. MCDEVITT
13019
LICENSED PROFESSIONAL ENGINEER
3/17/2016

REV	DESCRIPTION	DATE
1	ADDENDUM 1	4/1/2016
0	ISSUED FOR BID	3/17/2016

DESIGNED BY: BCM/MDLM
DRAWN BY: BCM
CHECKED BY: MDLD
203970.25-C400A.DWG

CIVIL DETAILS – 4

CITY OF AUBURN
60 COURT STREET
AUBURN, ME 04210

SOUTH MAIN STREET RECONSTRUCTION

JOB NO.: 224606.15
DATE: MARCH 2016
SCALE: AS NOTED
SHEET: 19 OF 22

C403

Z:\224606 Auburn – Gen Eng Services\wip\15 South Main Street Phase 3\Drawings\design drawings\203970.25-C400A.dwg Mar 31, 2016 – 3:01pm

22x34 SHEET
1:1

PLAN NOTES:

1. ALL MATERIALS, INCLUDING PIPING, BENDS, FITTINGS, VALVES, TEES, TRACER WIRE, HYDRANTS, SERVICE BOXES AND CURB STOPS WILL BE FURNISHED BY THE AUBURN WATER & SEWERAGE DISTRICT. CONTRACTOR SHALL BE RESPONSIBLE FOR FURNISHING BEDDING MATERIAL.
2. CONTRACTOR SHALL DISPOSE OF ALL EXCAVATED PIPING & APPURTENANCES.
3. ALL MAINS & SERVICES SHALL BE INSTALLED WITH 5 FEET OF COVER MEASURED FROM ROAD GRADE UNLESS OTHERWISE APPROVED BY AUBURN WATER & SEWERAGE DISTRICT REPRESENTATIVE.
4. ALL PRESSURE TESTING AND CHLORINATING WILL BE CONDUCTED BY AUBURN WATER & SEWERAGE DISTRICTS.

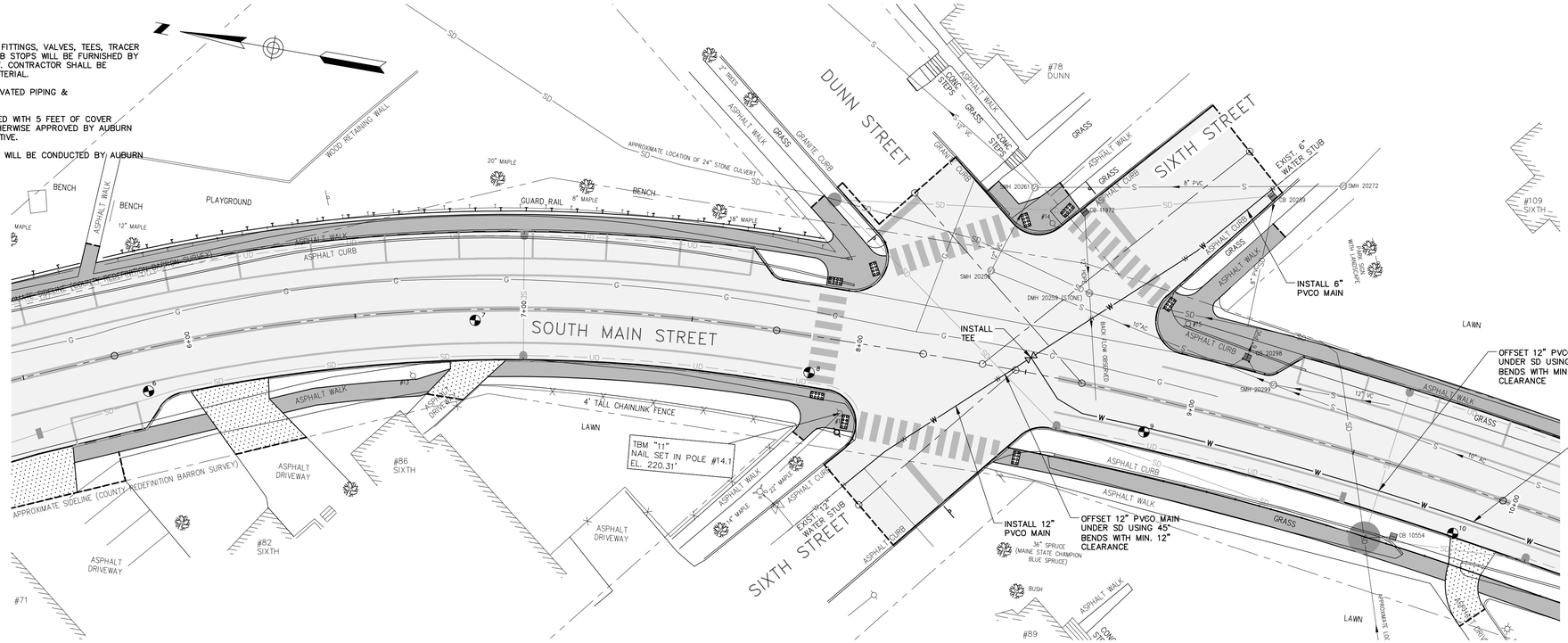

PLAN STA. 5+50 – 10+00

SCALE: 1" = 20'

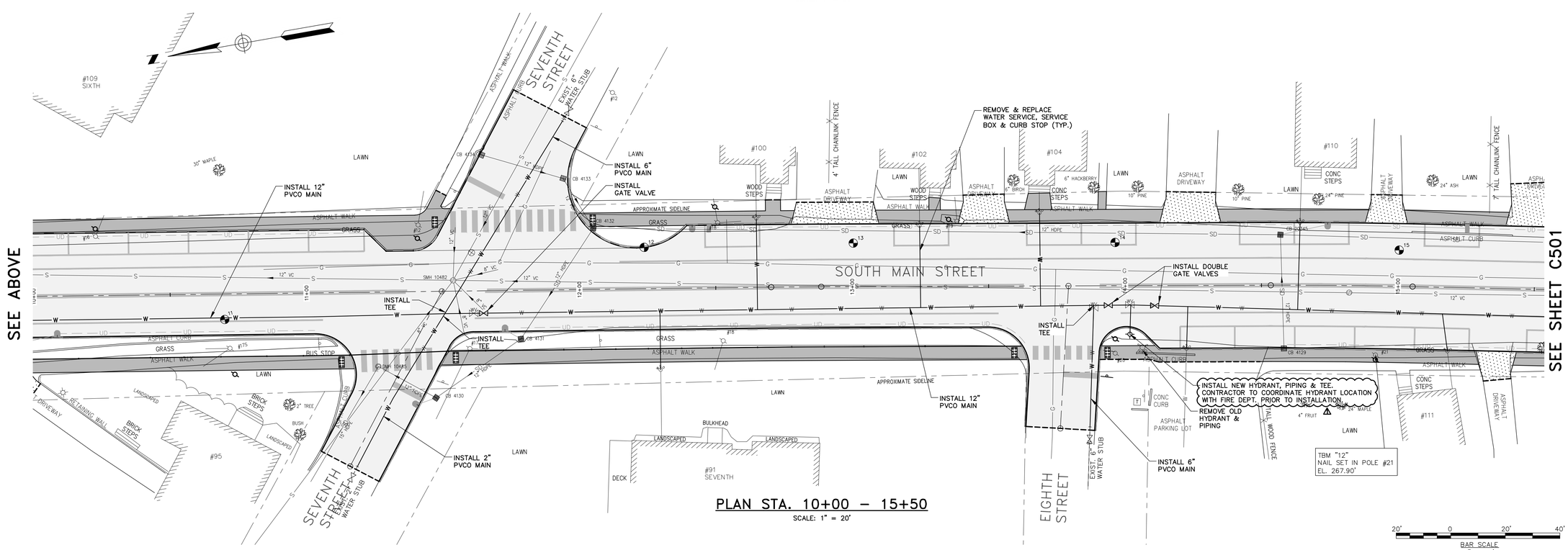

PLAN STA. 10+00 – 15+50

SCALE: 1" = 20'

BAR SCALE
1" = 20'
CHECK GRAPHIC SCALE BEFORE USING

41 Hutchins Drive
Portland, Maine 04102
800.426.4262 | www.woodardcurran.com
WOODARD & CURRAN
COMMITMENT & INTEGRITY DRIVE RESULTS

THIS DOCUMENT IS THE PROPERTY OF WOODARD & CURRAN INC. AND ITS CLIENT. REPRODUCTION OR MODIFICATION WITHOUT WRITTEN PERMISSION IS PROHIBITED.

STATE OF MAINE
MEGAN D.L. MCDEVITT
13019
LICENSED PROFESSIONAL ENGINEER
3/17/2016

REV	DESCRIPTION	DATE
1	ADDENDUM 1	4/1/2016
0	ISSUED FOR BID	3/17/2016

DESIGNED BY: BCM/MDLM
DRAWN BY: BCM
CHECKED BY: MDLD
203970.25-C500A.DWG

PHASE III WATER IMPROVEMENTS PLAN – 1

CITY OF AUBURN
60 COURT STREET
AUBURN, ME 04210

SOUTH MAIN STREET RECONSTRUCTION
PHASE III

JOB NO.: 224606.15
DATE: MARCH 2016
SCALE: AS NOTED
SHEET: 21 OF 22

C500

Z:\224606 Auburn – Gen Eng Services\wip\15 South Main Street Phase 3\Drawings\design drawings\203970.25-C500A.dwg, Mar 31, 2016 – 3:01pm

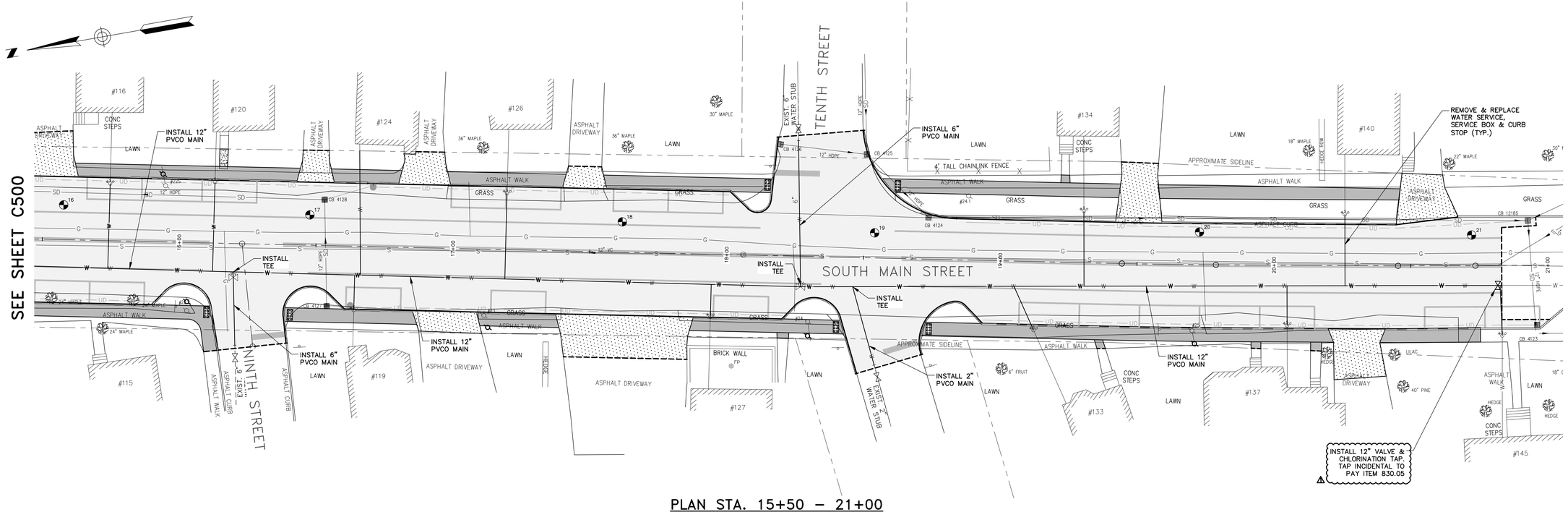

PLAN STA. 15+50 – 21+00

SCALE: 1" = 20'

BAR SCALE
1" = 20'
CHECK GRAPHIC SCALE BEFORE USING

PLAN NOTES:

1. ALL MATERIALS, INCLUDING PIPING, BENDS, FITTINGS, VALVES, TEES, TRACER WIRE, HYDRANTS, SERVICE BOXES AND CURB STOPS WILL BE FURNISHED BY THE AUBURN WATER & SEWERAGE DISTRICT. CONTRACTOR SHALL BE RESPONSIBLE FOR FURNISHING BEDDING MATERIAL.
2. CONTRACTOR SHALL DISPOSE OF ALL EXCAVATED PIPING & APPURTENANCES.
3. ALL MAINS & SERVICES SHALL BE INSTALLED WITH 5 FEET OF COVER MEASURED FROM ROAD GRADE UNLESS OTHERWISE APPROVED BY AUBURN WATER & SEWERAGE DISTRICT REPRESENTATIVE.
4. ALL PRESSURE TESTING AND CHLORINATING WILL BE CONDUCTED BY AUBURN WATER & SEWERAGE DISTRICTS.

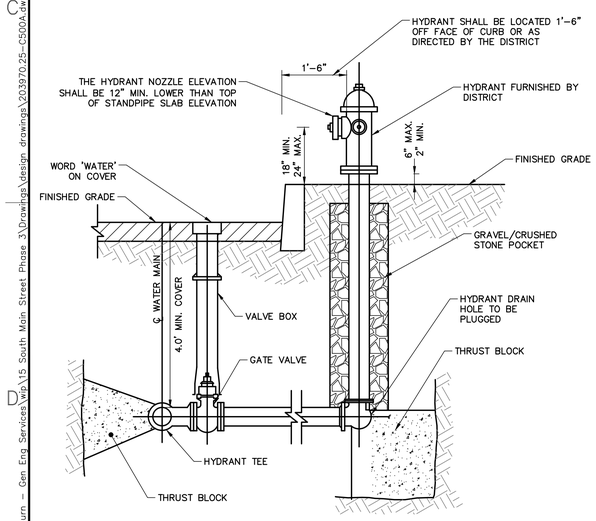

HYDRANT INSTALLATION

N.T.S.

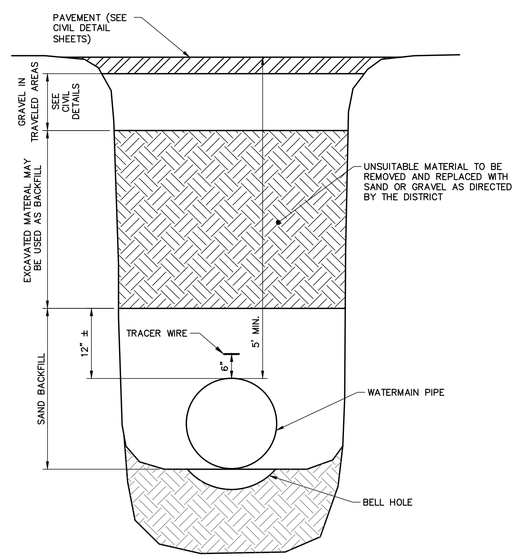

SECTION THROUGH EARTH TRENCH

N.T.S.

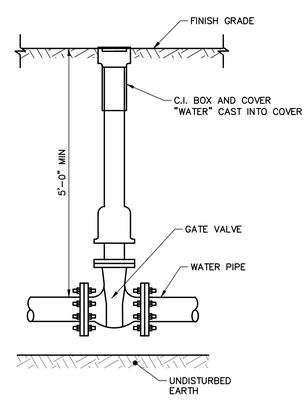

GATE VALVE

N.T.S.

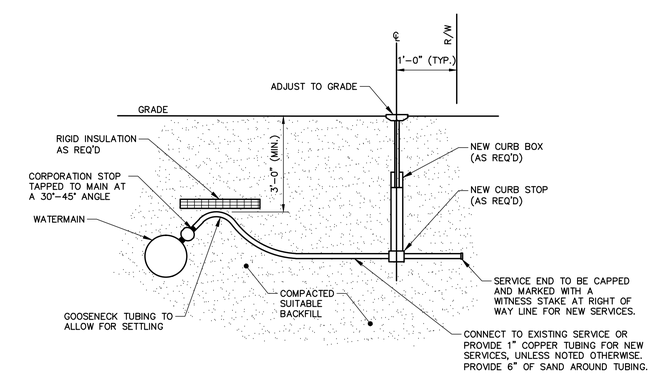

WATER SERVICE

N.T.S.

41 Hutchins Drive
Portland, Maine 04102
800.426.4262 | www.woodardcurran.com
WOODARD & CURRAN
COMMITMENT & INTEGRITY DRIVE RESULTS

THIS DOCUMENT IS THE PROPERTY OF WOODARD & CURRAN INC. AND ITS CLIENT. REPRODUCTION OR REUSE WITHOUT WRITTEN CONSENT IS PROHIBITED.

STATE OF MAINE MEGAN D.L. MCDEVITT 13019 LICENSED PROFESSIONAL ENGINEER 3/17/2016

REV	DESCRIPTION	DATE
1	ADDENDUM 1	4/1/2016
0	ISSUED FOR BID	3/17/2016

DESIGNED BY: BCM/MDLM
CHECKED BY: MDLD
DRAWN BY: BCM
203970.25-C500A.DWG

PHASE III WATER IMPROVEMENTS PLAN – 2

CITY OF AUBURN
60 COURT STREET
AUBURN, ME 04210

SOUTH MAIN STREET RECONSTRUCTION PHASE III

JOB NO.: 224606.15
DATE: MARCH 2016
SCALE: AS NOTED
SHEET: 22 OF 22

C501

22x34 SHEET
1:1

Z:\224606 Auburn – Gen Eng Services\wip\15 South Main Street Phase 3\Drawings\design drawings\203970.25-C500A.dwg, Mar 31, 2016 – 3:01pm